Eve Double Pro-line

EV Charging Stations

Installation and User Manual

ALFEN
POWER TO ADAPT

TABLE OF CONTENTS

1. Safety and usage instructions 3
1.1 Disclaimer 3
1.2 Improper use 3
1.3 Copyright 3
1.4 Trademarks 3
1.5 Languages 3
1.6 Purpose and intended audience 3
1.7 Explanation of text instructions used 3
1.7.1 Safety symbols 4
1.8 General safety 4
1.9 Software and complementary documentation 4
1.10 Operating conditions 5

2. Product Overview 6
2.1 Exterior view 6
2.2 Interior view 8
2.3 Identification label 9
2.4 Feeder cables overview (single / dual) 9

3. User interface 11
3.1 Charging stations display during charging 11
3.2 Status indicator symbols 11
3.3 Access control for local authorization (RFID cards) 11
3.3.1 Installing the Master Key 12
3.3.2 Adding and removing RFID cards in the local database 12
3.3.3 Removing the Master Key 12

4. Operation 13
4.1 Payment options 13
4.1.1 Starting and stopping the charging process with (mobile) bank card on the payment terminal 13
4.1.2 Starting the charging process with QR code 13
4.1.3 Finishing the charging process with QR code 15
4.2 Socket model: Start charging with RFID card 15
4.3 Socket model: Stop charging with RFID card 16
4.4 Socket model: Start charging with Plug&Charge 16
4.5 Socket model: Stop charging with Plug&Charge 17

5. Installing and connecting 18
5.1 Safety announcements 18
5.2 Assembly and installation requirements 18
5.3 Scope of delivery 19
5.4 Preparing the charging station 19
5.5 Wall-mounting the charging station 20
5.6 Pole-mounting the charging station 20
5.7 Electrical installation procedure 21

6. Commissioning 23
6.1 Safety instructions before use 23
6.2 Initial start-up 23
6.3 Testing the sockets 23

7. Connectivity 24
7.1 Configuring the charging station 24
7.1.1 Wireless-connection 24
7.1.2 Wired network connection 24
7.1.3 Backoffice management systems 24
7.2 Configuration tools 25
7.3 Before using the MyEve app 25
7.4 Before using the ACE Service Installer 25

8. Maintenance 26
8.1 Casing cleaning procedure 26
8.2 Display cleaning procedure 26

9. Disposal 27
9.1 Decommissioning and returning 27
9.2 Waste electrical and electronic equipment (WEEE) 27

10. Error codes and troubleshooting 28

11. Active Load Balancing 32
11.1 Modbus TCP/IP settings 33

12. About OCPP 36
12.1 How to set up 36

EN

1.1 Disclaimer

This document has been subjected to rigorous technical review before being published. It is revised at regular intervals, and any modifications and amendments are included in the subsequent issues. Although Alfen has made its best efforts to keep the document as precise and up-to-date as possible, Alfen does not assume any liability for defects and damage which results from the use of the information contained herein.

NOTE

This manual is subject to updates and changes. Errors and omissions excepted.

Any deviation to the products as assembled by Alfen including, but not limited to, customer-specific modifications to the product such as the placement of stickers, SIM cards or the usage of different colors (all referred to as 'Customization') may affect the final product, its experience, appearance, quality and / or lifespan (the Customized Product). Alfen is not liable for any damage to, or caused by, the Customized Product if this damage is caused by this applied Customization.

Alfen shall not be liable in any way, for any kind of damage, and the (B2B) warranty for the product and the accessories shall not apply in the following cases:

- Failure to comply with the instructions in this manual in general and with the operating conditions specifically.
- Improper use.
- External damage.
- Installation, commissioning or faulty repair or maintenance by unqualified persons.
- Failures from the grid or the GPS / GPRS provider.
- Modification or configuration of the product or accessories without the knowledge of Alfen.
- Use of spare parts not approved or manufactured by Alfen.
- The charging station is used outside its operating conditions as stated in this manual.
- Situations have occurred that are beyond the control of Alfen (force majeur).
- Malfunction of an (Open Charge Point Protocol) back office.
- Damage to the electrical vehicle.

1.2 Improper use

Using the charging station is safe when used as intended. Any other use or changes to the charging station are considered improper use and therefore not permitted.

The operator, owner or qualified technician is responsible for any personal injury or material damage arising from improper use.

1.3 Copyright

The reproduction, distribution and utilization of this document, as well as the communication of its contents to other parties without explicit authorization by Alfen N.V. or one of its affiliates, is strictly prohibited. © Alfen N.V.

1.4 Trademarks

Eve®, ICU®, Alfen® are trademarks by Alfen N.V.. Any unauthorized use of the trademarks is therefore illegal.

1.5 Languages

The English version of this document is the original source. Documents in other languages are translations of this source.

1.6 Purpose and intended audience

This manual applies to the Eve Double Pro-line (in this document also indicated as "charging station") produced by Alfen ICU B.V., Hefbrugweg 79, 1332 AM Almere, the Netherlands, reg. no. 64998363 ("Alfen"). The Alfen Eve Double Pro-line is intended exclusively for charging electric vehicles and, when installed correctly, may be used by untrained individuals. Follow this manual to install and commission the charging station correctly.

Installation, commissioning and maintenance of this charging station may only be performed by a qualified electrician. It is essential that the qualified technician has:

- Expertise on all relevant general and specific rules regarding safety and incident prevention
- Comprehensive knowledge of applicable electrical regulations.
- The ability to identify risks and avoid potential hazards
- Received and read these installation and operation instructions

1.7 Explanation of text instructions used

Safety warnings and precautions are indicated in this document as follows:

DANGER

"Danger" is the signal word that indicates an imminently hazardous situation that, if not avoided, will result in death or serious injury.

1. SAFETY AND USAGE INSTRUCTIONS

WARNING

"Warning" is the signal word that indicates a potentially hazardous situation that, if not avoided, could result in death or serious injury.

CAUTION

"Caution" is the signal word that indicates a potentially hazardous situation that, if not avoided, could result in minor or moderate injury.

NOTE

"Note" is the signal word that provides additional information or information on possible product damage.

1.7.1 Safety symbols

The following warning pictograms are attached to (parts of) the charging station:

Pictogram	Description
	Dangerous voltage
	Protective earth

1.8 General safety

Follow the stated safety aspects when operating the charging station:

DANGER

Risk of injuries, explosion or fire. Do not use the charging station in the vicinity of explosive or highly flammable substances.

DANGER

Risk of electrocution. Do not use the charging station if it is partially submerged in water.

DANGER

Risk of injury and electrocution. Do not use the charging station if it is damaged or plugs and cables are defective. Contact the charge point operator to repair the defects immediately.

DANGER

Risk of injury and electrocution. Keep away children or individuals who are not able to assess the risks associated with using this product.

More extensive safety information is available in the relevant sections of this document.

1.9 Software and complementary documentation

NOTE

You must have a wired network connection between the charging station and your laptop, tablet or smartphone to check whether a new firmware version is available.

- The MyEve app notifies if a new firmware version is available.
- The ACE Service Installer does not notify if a new firmware version is available. You need to check this via the menu *"Device/Upload new firmware..."*

NOTE

It is possible to request a printed copy of this manual in your language by Alfen at any time. Refer to the contact information for your request.

Under the following links you can obtain detailed information regarding the Eve Double charging stations.

Installation video Eve Double	Installation video	
YouTube channel	Alfen - Power to adapt	Provides installation, service and information videos.

Data sheet	Datasheet - Eve Double	Provides detailed information on models, technical features and equipment.
Knowledge Base	Knowledge Base	Provides service and procedure instructions.
Firmware & Error code list	Error codes and troubleshooting	Provides information on current firmware and list of error messages displayed on Eve Double.
Declaration of conformity	Declaration of Conformity Eve Double Pro-line	
Smart Charging configuration	Smart Charging Implementation Guide	Document required for configuring Smart Charging features.

Training for charging stations	Trainings charging stations equipment	Class-room trainings provided by .
Warranty	B2B Warranty	Provides the applicable Terms & Conditions of the Alfen B2B Warranty

1.10 Operating conditions

Operating temperature	- 25 °C to 40 °C
Relative atmospheric humidity	5 - 95%
Electrical safety class	I
Degree of protection (casing)	IP54
IK protection	IK10

2. PRODUCT OVERVIEW

EN

2.1 Exterior view

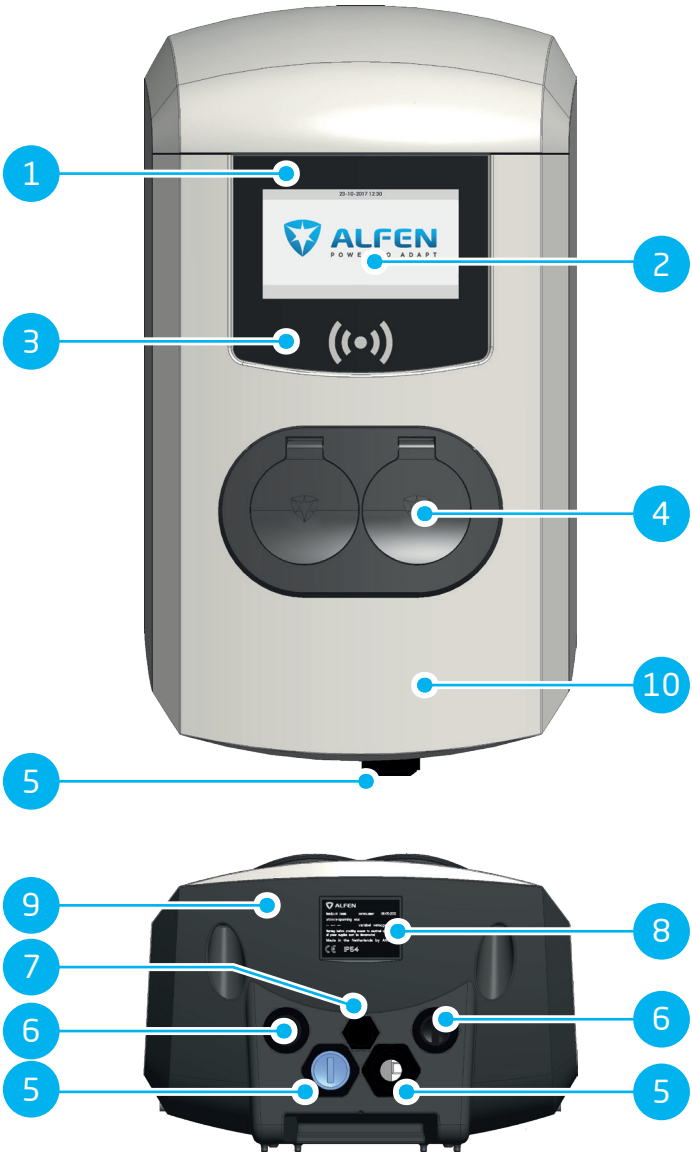

No.	Description
1	Charging station identification number
2	Display
3	Card reader
4	Type 2 plug connection
5	Cable gland(s) for power cable(s), entry
6	Cable glands for outgoing cable(s)
7	Cable gland for Service Installer / UTP cable
8	Identification label
9	Back cover
10	Front cover

2. PRODUCT OVERVIEW

2.2 Interior view

No	Description
9	Holes for wall mounting
10	SIM card holder
11	Connector P1 port
12	UTP (Ethernet) connection
13	Display connector
14	ON / OFF switch (4 pole) (model 904461022: 8 pole)
15	Ground wire terminal block (positioned under sockets)

2.3 Identification label

The identification label shows the following information:

Figure 2.1: Identification label

No.	Description
1	OCPP charge point model name (consisting of the platform name and the last five digits of the article number)
2	Type / Article number
3	Object number (unique number per charging station)
4	Technical specifications (such as the number of phases, maximum charging current and voltage)

NOTE

When contacting your charge point supplier / operator, always have your type / article number and object number available to facilitate quick support.

2.4 Feeder cables overview (single / dual)

The international standard for conductive charging systems for electric vehicles is the IEC-61851-1. All charging equipment must be installed according to the IEC-61851-1 standard.

Installation Eve Double Pro-line with single feeder cable supplying two sockets	Installation Eve Double Pro-line with dual feeder cable, each supplying one socket.
A shared short circuit protection and over current protection must be applied to the feeder cable in the installation. The value of the protection for each feeder cable must not exceed the output power of one outlet: A protection of 63 A on one feeder cable while the maximum output power is 32 A for each socket is not allowed according to the IEC-61851-1 standard.	The maximum output power is 32 A per socket. In accordance with the IEC-61851-1 standard a maximum protection of 32 A is permitted for each feeder cable.

WARNING

There is a heightened risk of injury or hazard during the installation of the two feeder cables. Follow the installation instructions carefully.

2. PRODUCT OVERVIEW

EN

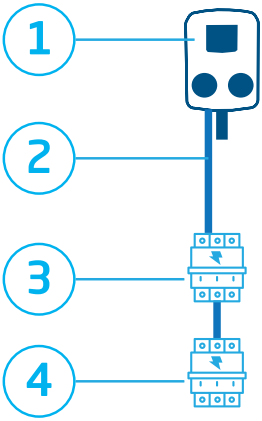

Figure 2.2: Protections scheme with single feeder cable

No.	Safety components description
1	Charging station (1 phase / 3 phase), Over current protection, Fault current protection
2	Feeder cable: 7.4 kW - 22 kW max.
3	For 2 x 3.7 kW / 11 kW Circuit breaker 20 A type B, or 35 A gG fuses Load balancing OPTIONAL
4	For 2 x 7.4 kW / 22 kW Circuit breaker 40 A type B, or 35 A gG fuses Load balancing REQUIRED

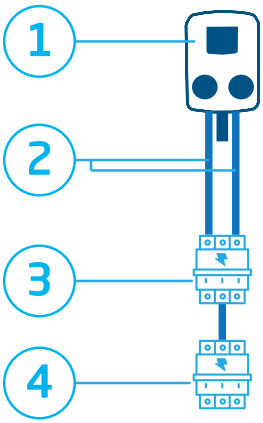

Figure 2.3: Protections scheme with dual feeder cable

No.	Safety components description
1	Charging station (1 phase / 3 phase), Over current protection, Fault current protection
2	Feeder cable: 7.4 kW - 22 kW max.
3	For 2 x 3.7 kW / 11 kW Circuit breaker 20 A type B, or 35 A gG fuses Load balancing OPTIONAL
4	For 2 x 7.4 kW / 22 kW Circuit breaker 40 A type B, or 35 A gG fuses Load balancing OPTIONAL

3.1 Charging stations display during charging

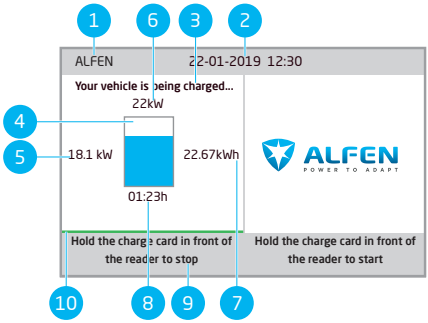

Figure 3.1: Display during charging from one socket

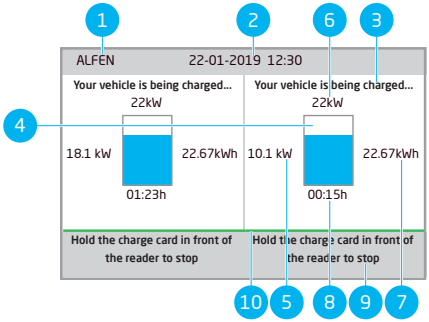

Figure 3.2: Display during charging from both sockets

No.	Description
1	Charge point ID: Identification is determined by the reseller or provider of the backoffice management system. This ID can be shared, for example: if support is needed.
2	Date and time: These are set automatically by a backoffice management system or during installation, using the MyEve app or the ACE Service Installer. If the charging station does not have a current time, this field is invisible.
3	Status information
4	Status indicator (symbols)
5	Current charging power to the connected vehicle
6	Maximum charging power of the charge point
7	Energy charged during the current charging session
8	Duration of the current charging session
9	Usage instructions: In this field, instructions are displayed. If an error occurs, an error code and instruction will also be shown in this field.
10	Progress bar: Displays the progress of the authorization process. A full progress bar indicates the background steps are completed and the charging session will start.

3.2 Status indicator symbols

RFID card accepted or cable connected

Warning. Notification with error code

Communicating with vehicle or charging complete

Error. Notification with error code

Charging session active, with charging speed indication

Progress bar

3.3 Access control for local authorization (RFID cards)

To control local user access to an Alfen charging station, install a RFID card as the 'Master key'. With this Master Key, you can grant access to other RFID cards for using your charging station.

NOTE

Your charging station must be configured correctly in order to accept Master Keys.

3. USER INTERFACE

3.3.1 Installing the Master Key

1. Select a RFID card, like the included Alfen RFID card.
2. Hold the RFID card in front of the RFID reader for 10 seconds.
3. After 10 seconds, the RFID card will be registered as the Master Key. The following icon appears on the screen:

NOTE

The charging station does not recognize the RFID card and will give a warning first. Ignore the warning.

NOTE

The charging station will only recognize one RFID card as the Master Key.

Once the Master Key is registered, it can be used to add or remove RFID cards from the local database.

3.3.2 Adding and removing RFID cards in the local database

For every RFID card held in front of the charging station, a sound signal will be given. Follow the on-screen instructions to manage access control:

NOTE

The Master Key cannot be used for charging. It is only used for access control of the charging station.

1. Hold the Master key in front of the RFID reader

2. Hold the RFID card you wish to add in front of the RFID reader. The following symbol is displayed:

3. Hold the RFID card you wish to remove in front of the RFID reader. The following symbol is displayed.

4. To close the database, hold the Master Key again in front of the RFID reader.

NOTE

If you have added or removed a RFID card in error, you can immediately hold it in front of the RFID reader to undo the action.

NOTE

To prevent the local database from being 'open' to access control, the menu will close automatically if no card has been detected or removed after 10 seconds. The symbol will disappear from the display.

3.3.3 Removing the Master Key

A Master key can only be removed using the MyEve app or the ACE Service Installer. If necessary, you can ask for help from one of our technicians. This might, however, incur costs. Therefore, always keep the Master key in a safe location.

4.1 Payment options

4.1.1 Starting and stopping the charging process with (mobile) bank card on the payment terminal

1. In order to authorize the payment,
   - present your (mobile) bank card to the card reader of the payment terminal.
2. Connect the charging cable to start the charging process. During charging the status indication on the charging station shows the progress. Charging will stop automatically when the battery has been charged completely.
3. When charging is completed or when you wish to stop the transaction:
   - present your (mobile) bank card to card reader of the payment terminal.
4. Unplug the charging cable.

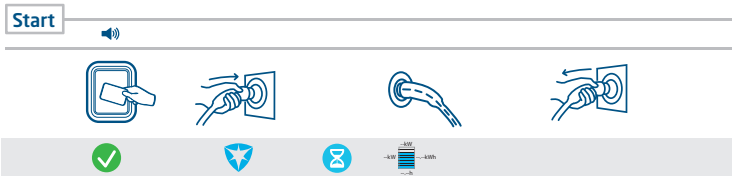

Figure 4.1: Customer Journey: Paying on payment terminal

4.1.2 Starting the charging process with QR code

The charging of the EV can be paid for by means of using a QR code. A smartphone (or similar device) is required, with a connection to the Internet and a camera to scan QR codes. Follow the steps described in the table below.

Where		Steps
on the charging station		The charging station shows a QR code.
		Scan the QR code with a mobile device.
		The mobile device decodes the QR code and opens a web page of the Charge Point Operator.

4. OPERATION

Where		Steps
on the web page of the Charge Point Operator		The web page shows a form that asks for an email address. Enter the correct email address. **NOTE** The email address is necessary for delivering an invoice for the costs of the charging session.
		After the email address is accepted, the web page shows the available payment providers that can handle the payment. Select the preferred payment provider.
		The mobile device opens the web page of the selected payment provider, typically a bank or an Internet payment service. **NOTE** The exact contents of this page depends on which payment provider has been selected.
		Authorize the payment. This may require a password or a different means of confirming your identity, depending on which payment provider has been selected. This information is only communicated with the payment provider.
		The authorization is checked and the web page of the Charge Point Operator shows that it is accepted. A start activation is sent to the charging station.
on the charging station		The charging station starts the charging process. It displays a green check mark and shows a message to insert the charging cable.
	 	Insert the charging cable in the charging station and in the EV.
		The charging process starts. The display of the charging station shows the details.

4.1.3 Finishing the charging process with QR code

Where		Steps
		Disconnect the charging cable from the vehicle. This stops the charging process.
on the charging station		The charging station unlocks the charging cable.
		The charging station shows a summary of the transaction and prompts to remove the charging cable from the charging station.
		Remove the charging cable from the charging station.
		The payment service provider settles the costs of the transaction. An invoice specifying these costs is sent to the email address that was specified earlier.

4.2 Socket model: Start charging with RFID card

Figure 4.2: Starting the charging process with user authorization / RFID card. Symbols shown on the user interface

No.	Description
1	Scan the RFID card on the charging stations RFID reader
2	Plug the charging cable into the socket
3	Plug the charging cable into the car
4	Charging in progress

4. OPERATION

4.3 Socket model: Stop charging with RFID card

Figure 4.3: Stopping the charging process. Symbols shown on the user interface

No.	Description
1	Scan the RFID card on the charging stations RFID reader
2	Remove the charging cable from the socket
3	Remove the charging cable from the car
4	Leave the charging place

4.4 Socket model: Start charging with Plug&Charge

Figure 4.4: Starting the charging process without RFID card. Symbols shown on user interface

No.	Description
1	Plug the charging cable into the socket
2	Plug the charging cable into the car
3	Charging in progress

4.5 Socket model: Stop charging with Plug&Charge

Figure 4.5: Stopping the charging process without RFID card. Symbols shown on user interface

No.	Description
1	Remove the charging cable from the car
2	Remove the charging cable from the socket
3	Leave the charging place

5. INSTALLING AND CONNECTING

EN

5.1 Safety announcements

DANGER

Risk of injury and electrocution. Installation, (de)commissioning and maintenance of the charging station may only be performed by a qualified electrician.

DANGER

Risk of injury and electrocution. Installing the charging station incorrectly may result in fatal injury! When working with electricity, failure to comply with relevant regulations can lead to dangerous and life-threatening situations.

DANGER

Risk of electrocution. The electrical system must be disconnected from every power source before performing any installation or maintenance work!

DANGER

Risk of injury and electrocution. The charging station contains electrical components that still contain a charge after being disconnected from the system. Always test with proper equipment that there is no residual current before starting to work.

WARNING

Risk of injuries, explosion or fire. Never install in a potentially explosive atmosphere.

WARNING

Risk of electrocution. Never install in areas prone to flooding without implementing compensatory measures.

WARNING

Risk of injury and electrocution. Installation work may not be carried out during rain or if the air humidity exceeds 95%.

WARNING

Risk of injury and electrocution. The installation must be performed by a qualified electrician who has read this manual and will execute the installation in accordance with the IEC 60364 (Electrical Installations for Buildings) standard.

WARNING

Risk of damage or electrocution. A charging station must always be installed on separate power circuit.

WARNING

Risk of damage or electrocution. Local conditions may affect the installation requirements. Your installation must comply with the standards and regulations of the location (country) where it is installed.

CAUTION

Risk of injury and damage. The installer is always responsible for choosing the correct cable diameter and complying with the relevant standards and legislation.

CAUTION

Risk of injury and damage. The installation and cables should be installed to match the maximum charging current to the input of the charging station. This should assume continuous load.

CAUTION

Risk of injury and damage. Mechanical impact and/or collisions might cause damage to the equipment. Protect Alfen products installed in public areas and car park sites.

CAUTION

Risk of damage. Adapters or conversion adapters are not allowed to be used.

5.2 Assembly and installation requirements

When selecting a location to install the charging station, the following criteria must be taken into account:

- Always fully comply with local technical requirements and safety regulations.
- The installation position is a solid, right angled wall.
- The recommended installation height must be 700 - 1200 mm from the ground to the bottom of the casing.
- The charging port on the vehicle must be easy to reach with the (attached) charging cable.
- The charging station must be installed at a location where the charging cable (approx. 5 - 7.5 m) can be used without placing any tension on the cable.

Ensure that the following requirements for installing the charging station have been met before starting:

- The cable trajectory from the main distributor to the Eve Double must be secured against short-circuiting with a B- or C-type circuit breaker (or other, in accordance with local standards and regulations), or gG type fuses (or other, in accordance with local standards and regulations).
- The cable trajectory must be equipped with 30-mA fault current protection with a type A or B residual current device (RCD).
- The earth leakage circuit breaker must be protected against the maximum current the charging station can process (20 A or 40 A).
- The cable trajectory and the charging station must be part of a TN-S system; the equipment must be earthed at the main distributor or with an earth pin (TT). An energy grid without a neutral conductor is not supported.
- The cable trajectory must be installed in accordance with the usual local professional standards.

5.3 Scope of delivery

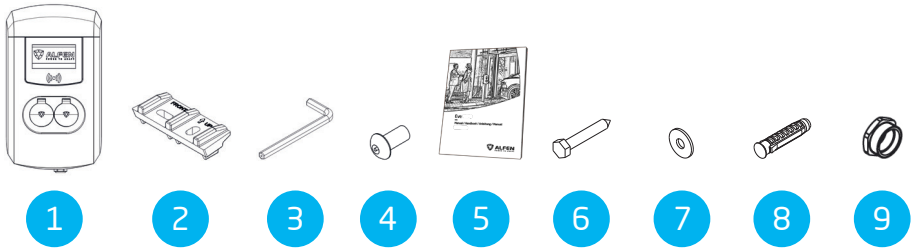

Table 1: Scope of delivery items

No.	Item	Quantity
1	Charging Station	1
2	Wall-mounting frame	1
3	Allen key	1
4	Anti-theft screw M8x20	2
5	Installation / User Manual	1
6	Hex bolt M8x50	4
7	Washer	4
8	Nylon plug S10x50	4
9	Reduction fitting	2

5.4 Preparing the charging station

Do not remove the protection foil from the casing during installation. This helps to prevent damage such as scratches on the display. Before installation, the front cover must be removed from the charging station. This is done as follows:

1. Lay the charging station on its back, preferably on a soft surface or the packaging itself.
2. Loosen the two M8 screws on the bottom with an Allen key and remove them.
3. Loosen the two M5 screws on the side of the back cover with a Torx T25 screwdriver and leave them.

5. INSTALLING AND CONNECTING

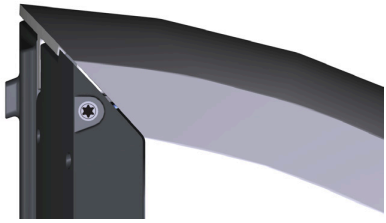

4. Store the M8 screws somewhere safe, they are required later.

5. Carefully lift the front cover, starting at the bottom (1) in an upwards direction (2, 3).

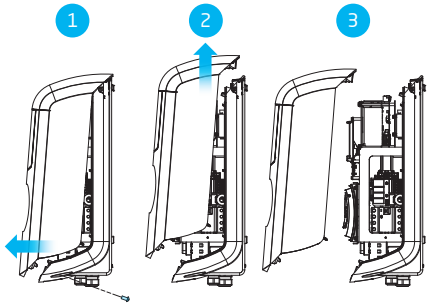

6. Place the front cover on the packaging to prevent damages.

5.5 Wall-mounting the charging station

1. Mark the wall for the drill holes. You can use the wall bracket for this purpose or measure manually. The distances between the drill holes are 123.8 mm (top side), 39.6 mm (bottom side) and 434.3 mm (vertical).
2. Place the mounting block at the desired location.
3. Use a spirit level to level the mounting block.
4. Mark the drill holes with a pencil.
5. Drill the holes at the marked points.
6. Verify the drill holes.
7. Push fitting wall plugs into the four drill holes.
8. Attach the mounting block to the wall by mounting two screws in the two bottom drill holes.

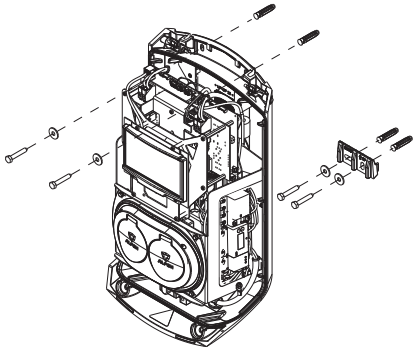

9. Place the casing onto the already installed mounting block, in a vertical downward movement.
10. Secure the casing to the wall by mounting two screws through the holes at the top of the casing.

The charging station has been mounted to the wall.

5.6 Pole-mounting the charging station

1. Dig a hole of approx. 500x500 mm with a depth of 650 mm.
2. Attach the pole to the pedestal with four M10x25 mm threaded bolts and the corresponding rings.
3. Place the concrete or metal pedestal in the hole.
4. Attach the mounting block to the pole with two M8x40 mm screw bolts.
5. Attach the charging station to the pole with two M8x40 mm screw threads.
6. Attach the ground wire to the pole with a M4x12 mm screw and a M4 washer.
7. Guide the ground wire through one of the glands into the charging station and connect the ground wire to the terminal block.
8. Mount the ground wire to the pole under the designated bolt.
9. Attach the cover plate to the pole with the anti-theft bolt M8x20 mm.

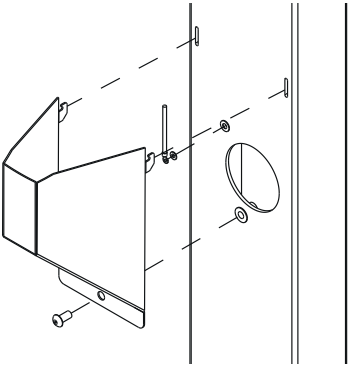

10. Refill the hole in which the pedestal is placed and level the surface.

11. Cover the area with a leveled protection such as tiles.

The charging station has been mounted to the pole.

5.7 Electrical installation procedure

Make sure you know if the charging station needs to be installed in a 3-phase or single phase variant.

1. If a SIM card has been ordered separately, it has to be installed. Place it behind the display with the chip facing the back of the casing.

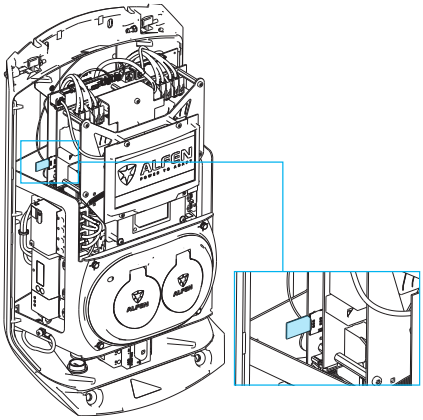

2. Install the UTP cable. The minimum requirement is a CAT5 UTP (Ethernet) cable.
   a. Pull the UTP cable through the M20 cable gland 1000 mm into the charging station.
   b. Guide the UTP cable to the top right of the charging station and make a loop through the ferrite clamp.
   c. Connect an RJ-45 connector to the UTP cable and plug the connector into the port.

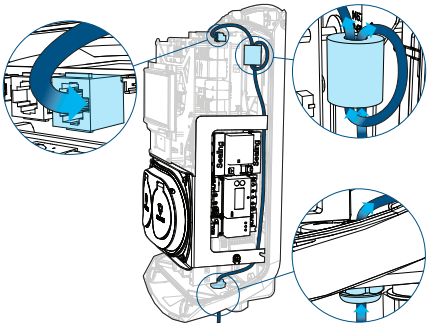

3. Pull the power cable through the cable inlet.

4. Pull the power cable at least 150 mm into the casing from the ground or wall.

5. Secure the power cable in the cable inlet by tightening it so that the power cable cannot be removed. The cable gland also functions as a strain relief.

6. Detach the subframe with the type 2 charging sockets:
   a. Detach first one side (left or right) followed by the other side. The subframe is equipped with a clicking mechanism on all four connection points.

5. INSTALLING AND CONNECTING

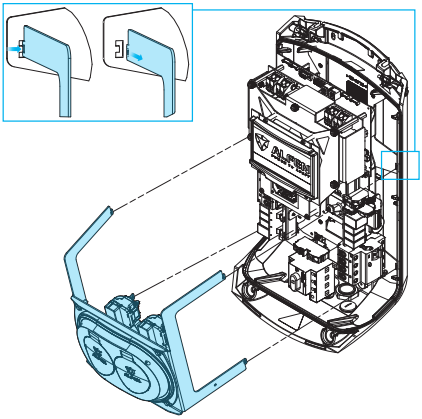

7. Remove the sheathing from the cables with a wire stripper to connect the exposed wires in the main switch.

8. Connect the wires to the isolating (ON / OFF) switch.

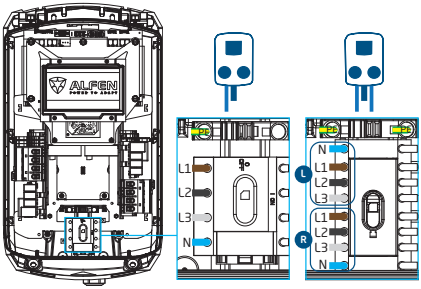

9. Place the subframe back in place by snapping the connection points into the back cover.

10. Verify that the residual current devices inside the charging station are enabled.

11. Set the isolating switch to the I (ON) position. If necessary, use a special wrench to simplify switching.

12. Place the front cover onto the back cover, starting at the top by fitting the pieces together.

13. Use a Torx T25 screwdriver to tighten the two M5 screws on both sides of the charging station.

14. Close the front cover properly by pressing it and tightening the M8x20 anti-theft screws on the bottom.

CAUTION

There must be no gaps between the individual parts of the casing. Moisture and dust entering the charging station will have a negative effect on the lifespan of the charging station.

15. Remove the transparent foil from the casing.

The charging station is now ready to be tested.

6.1 Safety instructions before use

Carry out the following safety instructions before commissioning your charging station:

1. Check if the charging station is properly connected to the power supply as described in this manual.
2. Check if the distribution of the power supply is separately protected by an appropriate breaker (automatic or fuse cartridges).
3. Check if the charging station is installed in accordance with this manual.
4. Check if the casing is closed.
5. Measure the isolation resistance to verify that the charging cable is not twisted and that the cable, plug and casing are not damaged.

6.2 Initial start-up

1. Turn on the local power supply.

   The charging station will run self diagnostics. The output is tested within a few seconds:

   - Testing locks
   - Testing internal relays: you will hear these click
   - The display will illuminate briefly

   The charging station will display the following:

   - The display will show the message 'Charging point is powering up' and then the start screen with logo.

Your charging station is now ready for testing.

6.3 Testing the sockets

1. Put the test charging cable or charging cable into the socket. Press firmly.
2. Hold the RFID card in front of the RFID reader to start charging.
   a. If you use a charging cable the texts 'Card accepted' and 'Charging in progress' are shown.
   b. If you use a test charging cable 'Please plug cable into vehicle' is displayed. An electrical load needs to be connected to simulate the charging process, then the texts 'Card accepted' and 'Charging in progress' are shown.

   The socket is functional.
3. Hold the RFID card in front of the RFID reader to stop charging.

   The text 'End of session' is displayed.
4. Pull out the test charging cable or charging cable.

   The socket is now ready for use.
5. Repeat the same procedure for the other socket.

7. CONNECTIVITY

EN

7.1 Configuring the charging station

7.1.1 Wireless-connection

How to establish a wireless (WiFi) connection between your device and the charging station:

NOTE

Currently the communication between the app and the charging station is only possible via a wired connection.

1. Download the MyEve app on your device. The device can be a smartphone, tablet or laptop.
2. Create an account in the MyEve app and login.
3. Find your newly installed charging station in the list of newly discovered devices.

   NOTE

   Bluetooth must be enabled on your mobile device.

4. Choose one of the options to connect your device:
   a. connect with the MyEve app directly to the WiFi network of the charging station or
   b. connect with the MyEve app to the same local area network (LAN) the charging station is connected to.
5. Enter the provided password.

   The network connection has now been established. Via the MyEve app you can configure the settings
6. After finishing the configuration, hand over the card with password (recovery) information to the customer.

7.1.2 Wired network connection

How to establish a wired network connection by connecting the charging station to your device using an UTP (Ethernet) cable:

NOTE

For the use of a smartphone or tablet an adapter such as a USB-C to Ethernet or Lightning to Ethernet is required.

1. Log into the MyEve app or the ACE Service Installer.
2. Connect your device to the switch or router or directly to the charging station.
3. Select your charging station from the list in the MyEve app or the ACE Service Installer.

   NOTE

   If the charging station(s) is (are) not detected automatically, the MyEve app or the ACE Service Installer might be blocked by the Firewall on your laptop, tablet or smartphone. Check the settings of your laptop, tablet or smartphone and try again.

4. Enter the provided password.

   The network connection has now been established. Via the MyEve app or the ACE Service Installer you can configure the settings
5. After finishing the configuration, hand over the card with password (recovery) information to the customer.

7.1.3 Backoffice management systems

If additional services by a backoffice provider have been purchased, the charging station has been configured ex-factory to connect to the selected backoffice management system.

NOTE

A connection with a backoffice management system can only be established if arrangements with the supplier of this system have been made. The service of third parties is not provided by Alfen.

NOTE

If the charging station is set to connect with a backoffice management system, it will do so directly and automatically.

NOTE

Manually configuring and connecting to a backoffice management system can be done with the MyEve app. A SIM card needs to be installed during installation. If you do not have a SIM card, please contact your backoffice provider.

NOTE

If a mobile communication (SIM card) Internet connection has been purchased, the charging station is already equipped with a SIM card and will automatically connect, once the charging station is being commissioned.

7.2 Configuration tools

The charging station can be accessed and configured:

- via the MyEve app
- via the ACE Service Installer

The app will guide you step-by-step through the configuration process.

NOTE

Currently the communication between the MyEve app and the charging station is only possible via a wired connection.

7.3 Before using the MyEve app

NOTE

The MyEve app is designed to be used exclusively by the installer / electrician. Its purpose is to commission and configure Alfen charging stations.

The MyEve app is not intended for end users of the charging station.

1. Download the MyEve app in Google Play, Apple Store or Windows Store to your laptop, tablet or smartphone.

Google Play Store	Apple App Store	Microsoft Store

2. You will be requested to create an account.
3. If you have the MyEve app installed, make sure you update to the latest version. Use the above QR-codes to see if your MyEve app needs to be updated.
4. Make sure the Firewall settings on your laptop, tablet or smartphone are not blocking the MyEve app.

7.4 Before using the ACE Service Installer

1. Download the ACE Service Installer from the Alfen website to your laptop:

https://alfen.com/en-gb/search-downloads

2. Request an account at this e-mail address: ace.aftersales@alfen.com.

NOTE

It may take some days until you receive the login-data.

3. If you have the ACE Service Installer installed, make sure you have the latest version. If updates are available, you will be asked to update when you log in.
4. Make sure the firewall settings on your device are not blocking the ACE Service Installer.

8. MAINTENANCE

EN

8.1 Casing cleaning procedure

NOTE

The casing of the charging station can be damaged. Do not use any aggressive cleaning agents, high-pressure cleaner, scouring pads or similar.

1. Fully close the charging station as described in the instructions before any cleaning procedure.
2. Annual cleaning:
3. - Use water and mild soap to clean the casing of the charging station.
4. Annual polishing:
   - If applicable, polish metal parts of the charging station using wax suitable for cars. Be cautious not to damage the casing.

8.2 Display cleaning procedure

NOTE

Handle the display delicately to ensure proper drying and prevent damage and colour change. Do not use any aggressive cleaning agents, high-pressure cleaner or abrasive materials.

NOTE

Be cautious with cards, tags, keys, and jewellery to avoid damaging the display window. Do not use a chamois, squeegee, or cloth.

1. Fully close the charging station as described in the instructions before any cleaning procedure.
2. Use a gentle stream of air to blow off any dust or sand particles.
3. Rinse the surface with a generous amount of water or a mild detergent solution.
4. If the surface appears to be clean, let the remaining water evaporate.
5. If needed, gently remove any remaining dirt and water:
   - Use a clean, soft brush.
   - Brush from top to bottom.
   - Apply minimal force.
   - Avoid circular motions.

9.1 Decommissioning and returning

⚠ WARNING

Risk of injury and electrocution. Installation, (de)commissioning and maintenance of the charging station must only be performed by a qualified electrician.

For returning charging equipment to Alfen Charging Equipment, create a 'Request for Service' ticket at support.alfen.com. For further instructions please view How do I return a charging station to have it repaired in Alfen's manufacturing facility (Carry-in)? You will receive all shipping instructions within the ticket.

9.2 Waste electrical and electronic equipment (WEEE)

Electrical and electronic equipment contains materials, components and substances that may be hazardous and present a risk to human health and the environment if not handled correctly.

Equipment marked with the illustrated crossed out wheeled bin is electrical and electronic equipment. The crossed out wheeled bin indicates that this waste must be collected separately and must not be discarded together with household waste.

Refer to your local authority for collection schemes under which residents can dispose waste electrical and electronic equipment at a recycling center or other collection points.

10. ERROR CODES AND TROUBLESHOOTING

EN

Code	Error message displayed	Icon	Possible cause	Possible countermeasures
General error				
001	Not able to charge. Please call for support.		Unknown general error.	Contact the service department of your charge point supplier.
Charging station related error				
101	One moment please. Your charging session will resume shortly.		DC fault current (>6mA) detected by charging station.	• One specific vehicle: Contact your car dealership. • Multiple vehicles: Contact the service department of your charge point supplier.
102	Not able to charge. Please call for support.		Internal error. Unexpected or no voltage on output of power board.	• Contact the service department of your charge point supplier. • Check powerboard.
104	Not able to charge. Please call for support.		Internal error. Voltage to low on internal power supply (power board).	• Contact the service department of your charge point supplier. • Check powerboard.
105	Not able to charge. Please call for support.		Internal error. No communication with internal power meter.	• Contact the service department of your charge point supplier. • Check if internal power meter is configured correctly. • Check internal power meter.
106	Not able to charge. Please call for support.		Power interrupted by internal RCD.	• Contact your installation engineer. • Internal RCD (Type A: 30 mA AC) tripped.
108	Not displayed.	Not displayed.	Charging station configured as Plug & Charge authorization mode and Plug & Charge ID is not configured.	• Contact the service department of your charge point supplier. • Configure Plug & Charge ID.
109	Not displayed.	Not displayed.	No connection / connection lost to card reader.	• Contact the service department of your charge point supplier. • Check if the card reader is connected correctly.
Installation related error				
201	Error in installation. Please check installation or call for support.		Protective earth not connected or unstable.	• Contact your installation engineer. • Recommended earth resistance of the installation < 100 Ohm.

Code	Error message displayed	Icon	Possible cause	Possible countermeasures
202	Input voltage too low, not able to charge. Please call your installer.		Supply voltage below 210 VAC.	Contact your installation engineer.
206	Temporary set to unavailable. Contact CPO or try again later.		Charging station is set to inoperative by the charge point operator / the charging station is updating.	Contact your charge point operator. • Firmware update in progress.
208	Not displayed.	Not displayed.	Supply voltage above 275 VAC.	• Contact the service department of your charge point supplier. • Check voltage levels.
209	Not displayed.	Not displayed.	No connection / connection lost to DSMR4.x / SMR5.0 (P1) smart energy Meter.	• Contact the service department of your charge point supplier. • Check DSMR4.x / SMR5.0 (P1) smart energy Meter connection.
210	Not displayed.	Not displayed	No connection / connection lost to Modbus TCP/IP energy meter / energy management system.	• Contact the service department of your charge point supplier. • Check Modbus TCP/IP energy meter / energy management system.
211	Not able to lock cable. Please call for support.		Unable to move locking motor during build-in self-test.	• Contact your installation engineer. • Check if locking motor is connected correctly. • Check if locking motor can move.
212	Error in installation. Please check installation or call for support.		Missing phase in installation.	• Contact your installation engineer. • Check voltage levels.
213	Not displayed.	Not displayed.	No connection / connection lost to TIC smart energy Meter.	• Contact the service department of your charge point supplier. • Check TIC smart energy Meter connection.
214	Not able to charge. Please call for support.		Tariffs not configured, required for ad-hoc payments with Eichrecht.	• Contact your charge point operator. • Tariffs not configured (StartPrice & EnergyPrice).
Vehicle related error				
301	One moment please your charging session will resume shortly.		Unknown error in communication with car.	• Check car and charging cable. • Otherwise contact the service department of your charge point supplier.

10. ERROR CODES AND TROUBLESHOOTING

EN

Code	Error message displayed	Icon	Possible cause	Possible countermeasures
302	One moment please your charging session will resume shortly.		Safety measure, Vehicle draws more power than allowed / did not reduce power in time according to the IEC 61851 standard.	• One specific vehicle: Contact your car dealership. • All vehicles: Contact the service department of your charge point supplier.
303	One moment please your charging session will resume shortly.		Safety measure, vehicle has started and stopped charging to often within 1 minute.	• Check car and charging cable. • Otherwise contact the service department of your charge point supplier.
304	Charging not started yet to continue please reconnect cable.		Cable connected for more than 2 minutes without starting a charging session.	• Reconnect cable and start charging session within 2 minutes. • Otherwise contact the service department of your charge point supplier.
Ambient or equipment related error (user, plug, cable, weather conditions etc.)				
401	Inside temperature high. Charging will resume shortly.		Temperature inside the charge point above 70 degrees Celsius.	Unexpected: • Ambient temperature. • No EV charging. Contact the service department of your charge point supplier. Expected: • Ambient temperature. • Installed in direct sunlight. • EV charging. Contact your installation engineer.
402	Inside temperature low. Charging will resume shortly.		Temperature inside the charge point below -40 degrees Celsius.	• Unexpected ambient temperature. Contact the service department of your charge point supplier. • Expected ambient temperature.
404	Not able to lock cable. Please reconnect cable.		Unable to lock the charging cable.	Contact the service department of your charge point supplier. • Check socket and charging cable plug. • Check if the lock motor can move freely.
405	Cable not supported. Please try connecting your cable again.		Measure PP resistance of the charging cable is out of range according to the IEC 61851 standard.	• One specific cable: Issues with other charge points. Cable broken • All cables: No issue with other charge point. Contact the service department of your charge point supplier.

Code	Error message displayed	Icon	Possible cause	Possible countermeasures
406	No communication with vehicle. Please check your charging cable.		Monitored CP voltage level is out of range according to the IEC 61851 standard.	• One specific cable: Issues with other charge points. Cable broken • All cables: No issue with other charge point. Contact the service department of your charge point supplier.
407	Not displayed.	Not displayed.		

11. ACTIVE LOAD BALANCING

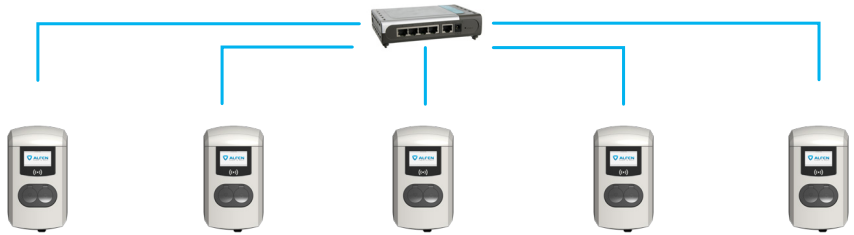

The Eve Double Pro-line charging station has the following Smart Charge options:

- Active load balancing:

  This offers the same functionality for managing charging speeds as the default load balancing in double charging stations. Managing the maximum charging current now, however, is a dynamic process. The charging station communicates with the smart meter in your installation or home and takes the current usage and maximal capacity of your grid connection into account.
- Smart Charging Network (SCN):

  When activated, Alfen charging stations will recognize each other within a local network, a so-called charging plaza. In that case, the local grid settings are shared between the charging stations. Together, the charging stations decide how much power each outlet - provided a vehicle is connected - will be allocated. To simplify the order process of smart charge functionalities, a number of parameters have been provided with default settings. This appendix provides the values of these settings. If your installation needs different settings from these defaults, use the ACE Service Installer to configure the charging station for your specific situation.

Requirements for the installation:

- Alfen charging stations with activated Active Load balancing functionality.
- Communication cable with 4-wire RJ-11/RJ-12 connectors.
- Smart meter supporting one of the following protocols:
  - DSMR or eSMR over a P1 port.
  - Modbus TCP/IP: the charging station will assume the role of the Modbus client in this configuration. The smart meter is the server.
- The charging station is also able to communicate with a customer's Energy Management System (EMS).
  - The communication protocol Modbus over TCP/IP is used to transfer data from the EMS to the charging station.
  - In this case the charging station acts as a the server and the EMS as the client.

NOTE

Alfen recommends a maximum cable length of 20 m, combined with the P1 port. Always check if the communication with the smart meter is working properly. The quality of the signals depend on several factors. Therefore, always limit the cable length to prevent risks concerning the signal.

Alfen is not liable for continuous and correct operation of the connection to the P1 meter and the quality of the transferred signals.

The charging station and the smart meter communicate via the P1 port. For this, the DSMR protocol is used. Periodically, information on current usage is exchanged. When the meter capacity is reached, the charging station will adjust the connected vehicle. This prevents the installation from overloading, otherwise the cost of the grid connection will unnecessarily go up. This functionality effectively makes for 'peak shaving', it controls the power supply during peak moments.

If the P1 port of the smart meter is already occupied by another device, you can use a splitter. For advice on splitters, please contact your dealer.

NOTE

Not all splitters can be used. 2-wire connectors cannot be used. In that case, your charging station might not be able to communicate with the smart meter. Alfen is not liable for continuous and correct operation of the connection to the P1 meter if this has multiple devices and/or splitters attached.

To set up the Active Load Balancing correctly, set the following parameters:

- Station-maxCurrent; This limits the maximum current on the charging station group.
- SmartMeter-maxCurrent; This is the capacity of your grid connection. When in doubt, check this with your grid operator.
- Load balancing safe current (A): the value of the current that remains available for the charging station (or

charging plaza) when the connection between the energy meter and the charging station is lost.

The table below provides the default settings for the parameters indicated:

Settings for maximum input current	At the outlet	Assumed settings	Active Load Balancing on 1-phase connection	Active Load Balacing on 3-phase connection
16 A per phase	1 x 3.7 kW 1x 11 kW	Station-MaxCurrent	16	16
		SmartMeter MaxCurrent	25	25
32 A per phase	1 x 7.4 kW 1 x 22 kW	Station-MaxCurrent	32	32
		SmartMeter-MaxCurrent	40	35

If these values do not apply to your situation, have the installer adjust the settings using the ACE Service Installer.

11.1 Modbus TCP/IP settings

In order for smooth communication with the smart meter through the Modbus TCP/IP, both need to be installed in the same network. Before reading out all necessary data fields, the smart meter and the charging station need to be able to communicate. For that, the following settings are important:

Factory settings	Options	Values
SCN-NetworkName	Name of the SCN.	Maximum of 8 characters
SCN-SocketID	Unique ID of a socket within an SCN. For a charging station with two sockets, this identification represents socket 1.	0-255
SCN-SocketCount	The total amount of sockets in the SCN.	Maximum 100
SCN-AlternatingPeriod	The alternating period used in the event of insufficient capacity. This characteristic is automatically synchronized between charging stations within an SCN.	Maximum 65535 (seconds) Default: 360
SCN-TotalStaticCurrent	The maximum available capacity available for the SCN in amperes. This characteristic is automatically synchronized between charging stations within an SCN.	Default 200 A
SCN-SocketSafeCurrent	This safety value is used as a fall-back in case a charging station loses connection with the other stations. This characteristic is automatically synchronized between charging stations within an SCN.	Default 6.0 A

11. ACTIVE LOAD BALANCING

Factory settings	Options	Values
SCN-PhaseMapping-1	Single feeder cable on the left Socket: This characteristic shows how the charging station is connected to the installation (phase shifts). **NOTE** With dual feeder cable: Use SCNPhasemapping-2.	Default: 4 • 1= L1 • 2= L2 • 3 = L3 • 4= L1L2L3 • 5= L1L3L2 • 6= L2L1L3 • 7= L2L3L1 • 8 = L3L1L2 • 9 = L3L2L1 Other values are invalid.
SCN-PhaseMapping-2	For single feeder cable on the Right Socket: This characteristic shows how the charging station is connected to the installation (phase shifts).	Default: 4 • 1= L1 • 2= L2 • 3 = L3 • 4= L1L2L3 • 5= L1L3L2 • 6= L2L1L3 • 7= L2L3L1 • 8 = L3L1L2 • 9 = L3L2L1 Other values are invalid.
SCN-TotalSafeCurrent	Used as a fall-back in case multiple charging stations loose connection with the other stations. The total number of active charging stations will be limited not to exceed the SCN-TotalSafeCurrent. This characteristic is automatically synchronised between charging stations within an SCN.	Default 32.0 A

The table below provides an overview of values that can be read. Because the charging stations adjust to the currents per phase (bold in the table), this is the minimal information necessary to operate the Active Load Balancing.

Measured value	Step size	Data type
Voltage L1L2 [V]	0.01 [V]	UNSIGNED32
Voltage L2L3 [V]	0.01 [V]	UNSIGNED32
Voltage L3L1 [V]	0.01 [V]	UNSIGNED32
Voltage L1N [V]	0.01 [V]	UNSIGNED32
Voltage L2N [V]	0.01 [V]	UNSIGNED32
Voltage L3N [V]	0.01 [V]	UNSIGNED32

Measured value	Step size	Data type
Frequency [Hz]	0.001 [Hz]	UNSIGNED32
Current L1 [A]	**0.001 [A]**	**UNSIGNED32**
Current L2 [A]	**0.001 [A]**	**UNSIGNED32**
Current L3 [A]	**0.001 [A]**	**UNSIGNED32**
Current N [A]	0.001 [A]	UNSIGNED32
Active Power Sum [W]	0.1 [W]	SIGNED32
Reactive Power Sum [VAr]	0.1 [VAr]	SIGNED32
Apparent Power Sum [VA]	0.1 [VA]	UNSIGNED32
Cos(phi) Sum [ ]	0.001 [ ]	SIGNED32
Active Power L1 [W]	0.1 [W]	SIGNED32
Active Power L2 [W]	0.1 [W]	SIGNED32
Active Power L3 [W]	0.1 [W]	SIGNED32
Reactive Power L1 [VAr]	0.1 [VAr]	SIGNED32
Reactive Power L2 [VAr]	0.1 [VAr]	SIGNED32
Reactive Power L3 [VAr]	0.1 [VAr]	SIGNED32
Apparent Power L1 [VA]	0.1 [VA]	UNSIGNED32
Apparent Power L2 [VA]	0.1 [VA]	UNSIGNED32
Apparent Power L3 [VA]	0.1 [VA]	UNSIGNED32
Cos(phi) L1 [ ]	0.001 [ ]	SIGNED32
Cos(phi) L2 [ ]	0.001 [ ]	SIGNED32
Cos(phi) L3 [ ]	0.001 [ ]	SIGNED32

12. ABOUT OCPP

EN

The functionalities of the SCN are available through the UTP/Ethernet connection of the charging stations. This can easily be combined with communication over OCPP, through UTP/Ethernet or GPRS. Note that you need one SIM card per charging station. To limit costs, you can also use a router and a (2G/3G/4G) modem. In that case, the charging stations should be set to communicate with a wired network. The router is then set for the (secure) APN of the relevant management system.

12.1 How to set up

Network choice	Per charging station	OCPP settings
Smart Charging Network with OCPP GPRS	SCN ON	OCPP Management System Selection for GPRS
Smart Charging Network with OCPP GPRS	SCN ON	OCPP Management System selection for UTP
Smart Charging Network with OCPP through external GPRS router	SCN ON	OCPP Management System selection for UTP
Electrical supply (local installation)	Always set to full power per charging station.	
Settings	Factory settings: set for charging station (max output)	

Contact

Alfen ICU B.V.
Hefbrugweg 79
1332 AM Almere
The Netherlands

P.O. box 1042
1300 BA Almere
The Netherlands

Alfen Knowledge Base:	knowledge.alfen.com
Alfen Service Portal:	aftersales.alfen.com
Tel. Service:	+31 (0)36 54 93 402
Website:	alfen.com

ALFEN
POWER TO ADAPT