peblar ROCKSOLID CHARGERS

Peblar
Home / Business
Installation manual

1. Introduction

1. Introduction 2

1.1. About this document 3
1.2. Symbols used in this manual 3
1.3. Glossary 4

2. Safety 5

3. Get to know your charger 6

3.1. Check the box 6
3.2. Main parts 7
3.3 Status LED colours 7
3.4. Internal connections 8

4. Prepare your installation 9

4.1. Single charger features 10
4.2. Group features 11
4.3 Choose a measurement source 13
4.4. Network connection 14
4.5. Necessary tools 15
4.6. Choose a location 15
4.7. Run cables to the location 16

5. Installation 17

5.1. Mount the charger to the wall 17
5.2. Connect the power cable 20
5.3. Connect the fixed charging cable - only for fixed cable variants 22
5.4. Place the front assembly 23
5.5. Set up a network connection 23
5.6. Install the selected measurement source 24
5.7. Interconnect chargers for daisy-chain group load balancing 28
5.8. Close the charger 31
5.9. Switch on the power supply 31

6. Commissioning 32

6.1. Connect to the WLAN hotspot of the charger 32
6.2. Complete the online installation wizard 33
6.3. Attach the front covers 36

7. Troubleshooting 36

8. Decommissioning 37

9. Discard 38

Appendix A: Declaration of conformity 39

Appendix B: Disclaimer of liability 39

Appendix C: Model identification string 40

1.1. About this document

This installation manual is part of the technical documentation provided with the Peblar Type 2 AC charger, and is written to ensure safe and proper installation of the charger. Keep this manual for future reference.

Only use the charger within the specified environmental conditions as stated in the spec sheet, available on **www.peblar.com**.

Read and follow all safety warnings in this manual before installing the charger.

1.2. Symbols used in this manual

This manual contains symbols that indicate useful information that complements the instructional text and illustrations.

Safety warnings

Symbol	Meaning
WARNING!	Could result in death or serious injury if this instruction is ignored or not followed correctly.

Safety warnings given at the start of a section apply to the entire section.

Other symbols

Symbol	Meaning
NOTICE	Could result in damage to the product if this instruction is ignored or not followed correctly.
Note	Additional information or emphasis on an instruction.

1.3. Glossary

Abbreviations

Abbreviation	Meaning
AC	Alternating Current
CP	Control Pilot
CT	Current Transformer
EV	Electric Vehicle
IK	Impact Protection
IP	Ingress Protection
LED	Light Emitting Diode
LTE	Long Term Evolution
MCB	Mains Circuit Breaker
NFC	Near-Field Communication
OCPP	Open Charge Point Protocol
QR	Quick Response
RCD	Residual Current Device
RFID	Radio-Frequency Identification
WLAC	White-Label AC Charger
WLAN	Wireless Local Area Network

Units of measurement

Unit	Description
A	Ampere
dBm	Decibell-milliwatts
Hz	Hertz
kW	kiloWatt
kWh	kiloWatt-hour
m	meter
mm	millimeter
V	Volt

2. Safety

The charger is intended exclusively for charging EVs compatible with Type 2 chargers. Read and follow these safety precautions before installing the charger.

The installer is responsible for installing the charger in accordance with any relevant country-specific standards and local regulations not covered in this manual.

WARNING!

- The installation must be carried out by a qualified installer who has read this manual.
- Switch off the mains supply and apply proper lock out tag out before installing the charger, performing maintenance, repair work or decommissioning the charger to avoid the risk of an electric shock.
- Keep the power supply switched off until you have completed installing the charger and you have closed the front assembly.
- Do not install the charger in wet weather conditions or when the humidity exceeds 95%.
- Do not install the charger near flammable substances or heat sources.
- Do not install the charger or charging cable when either is damaged or faulty.
- Always install the charger to a dedicated upstream circuit breaker (MCB) and residual current device (RCD). The MCB (characteristic B or C) must have a current rating in accordance with the local mains supply and required charge current (max 40A). The RCD must be either type A (30mA) or type B (30mA), depending on local regulations.
- Consult local installation standards for additional requirements.

NOTICE

- Do not leave the vehicle connector of the charging cable on the ground.
- Do not remove or adjust any markings or labels from the charger.
- Only transport the charger packaged in the original packaging.
- Only move, transport, or store the charger within the allowed temperature and humidity ranges, as stated in Appendix C of this manual.
- Minimal required network cables are UTP (Cat 5), however we recommend S/FTP (Cat 6) cables to be used for stability.

3. Get to know your charger

3.1. Check the box

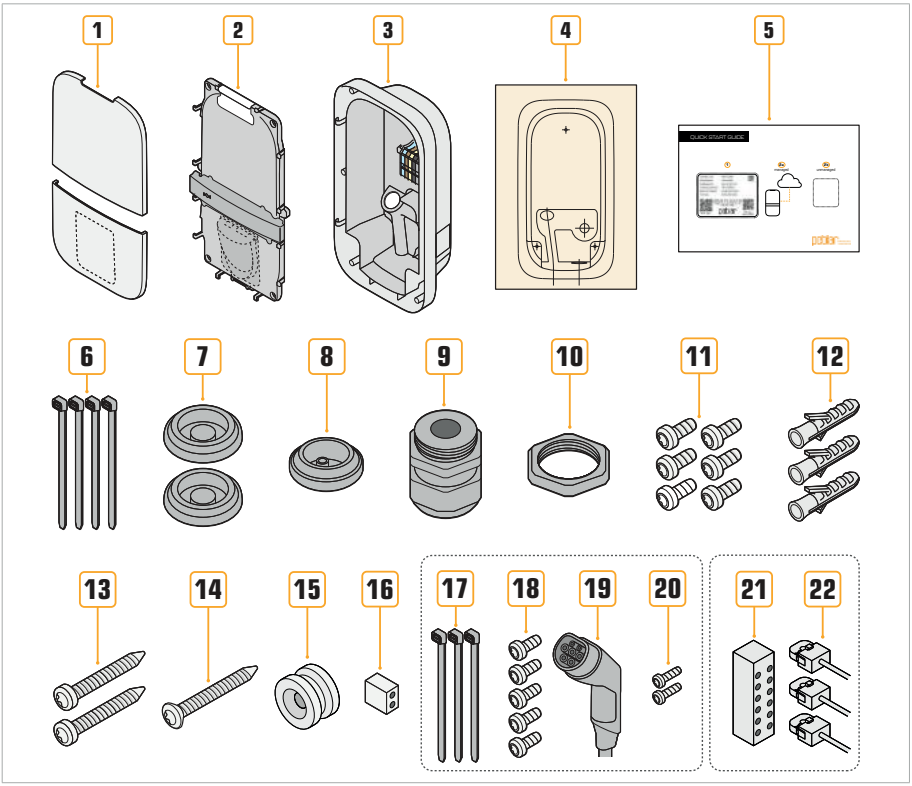

1 Cover plate (2×)
2 Front assembly
3 Base
4 Drilling template
5 Quick start guide
6 Cable tie (4×)
7 Mains supply cable grommet (2×)
8 Peripheral cable grommet
9 M32 cable gland with reduction insert
10 M32 cable gland nut
11 TX20 front assembly screw (6×)
12 8mm wall plug (3×)
13 5×50mm TX30 pan screw (2×)
14 5×60mm TX30 countersunk screw
15 Wall mounting ring
16 Bus termination jumper

Cable version only:

17 Cable tie (3×)
18 TX20 Fixed charging cable screw (5×)
19 Fixed charging cable
20 3×10mm TX10 strain relief screw (2×)

Dynamic load balancing kit (sold separately):

21 Distribution block for current transformers
22 Current transformer (1 or 3)

3.2. Main parts

1. Status LED
2. Ambient light sensor
3. RFID scanner
4. Display
5. Product identification label
6. a: Type 2 charging socket
   b: Fixed Type 2 charging cable

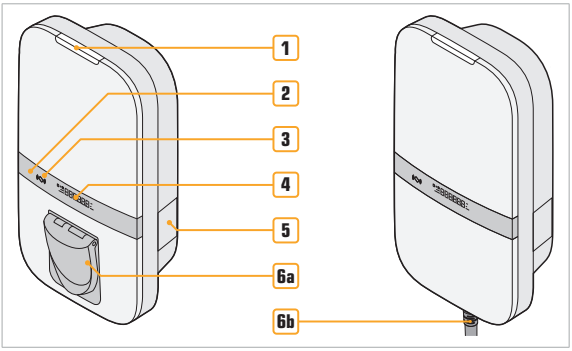

3.3 Status LED colours

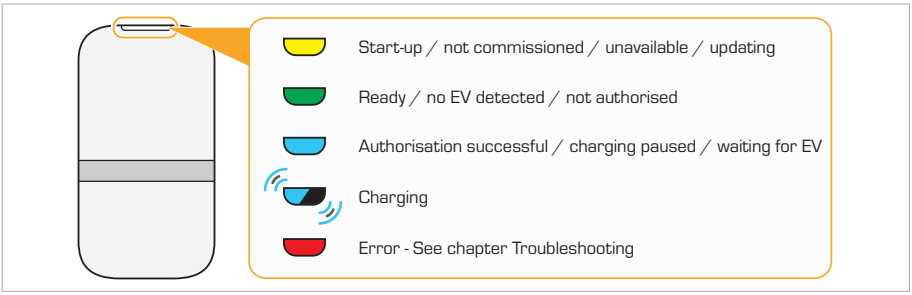

3.4. Internal connections

The overview below shows all available connectors inside of the charger.

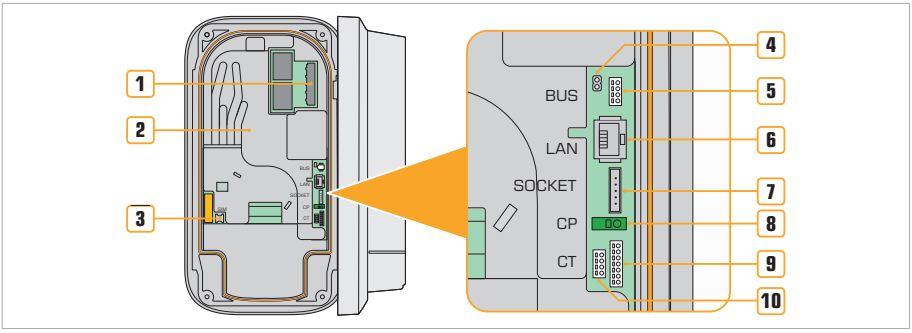

1 Power connector
2 Energy meter accuracy LED
3 SIM card holder*
4 BUS termination jumper
5 BUS connector
6 Ethernet connector
7 Socket connector
8 Control pilot connector
9 CT coils connector
10 Digital inputs connector*

*optional

4. Prepare your installation

Before installing the charger, it is important to determine the complete configuration of the charger installation. This way, you can properly prepare all necessary cables and peripherals to ensure a quick and successful installation.

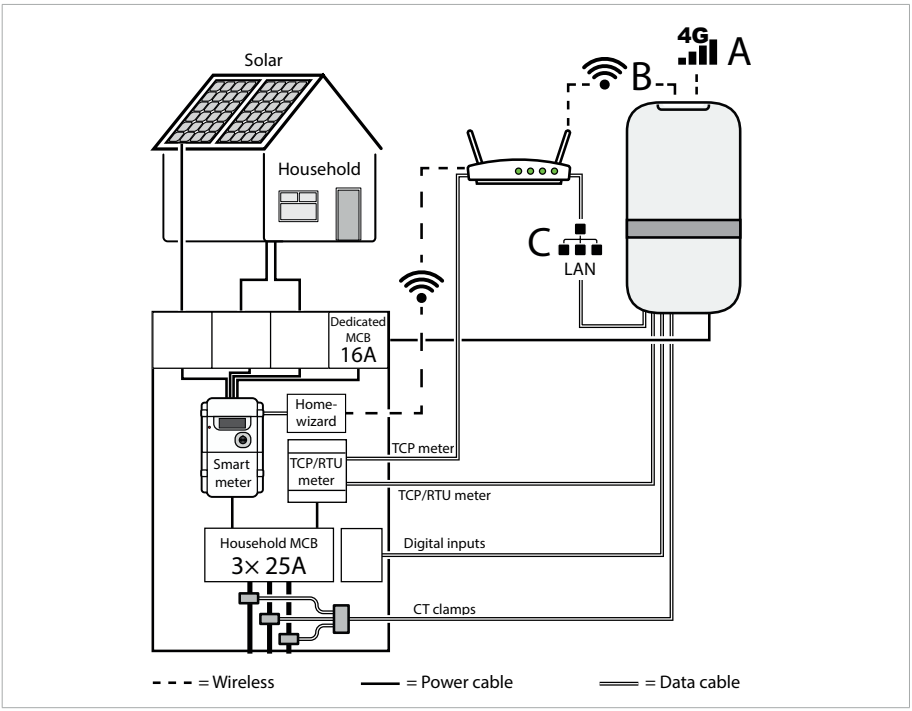

Single	Group
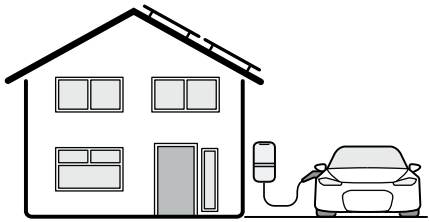	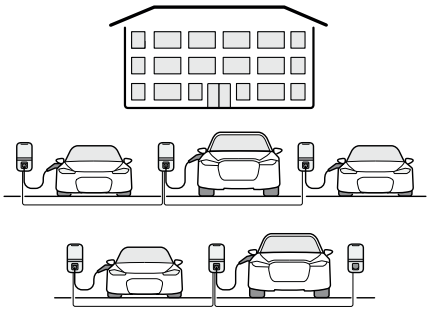
Go to Chapter 3.1.	Go to Chapter 3.2.

4.1. Single charger features

Dynamic load balancing

Dynamic load balancing monitors the real-time current draw of the household or building grid and adjusts the current of the charger when other appliances are in use to prevent exceeding the fuse limit. To enable this feature, you have to connect the charger to a measurement source. Refer to Chapter 4.3 for a suitable measurement source.

Solar charging

The charger can work in combination with PV systems to charge EVs using solar energy when available. Solar charging monitors both the power generation of the PV system and the consumption of the household and adjusts the charger current to use pure solar energy or a mix of energy from the grid and the PV system. To enable this feature, you have to connect the charger to a measurement source and enable solar charging during commissioning. Refer to Chapter 4.3 for a suitable measurement source.

Household limit

Configure a household power slider to set a maximum to household power consumption, which can be adjusted based on your preferences or household needs. The charger automatically limits the charging power based on:

- The current household power consumption
- The available capacity
- The user-defined limit set by the power slider

e.g. if the limit is set to 10 kW and the household power consumption is 4kW, the charger limits charging to 6 kW.

Refer to Chapter 4.3. for a suitable measurement source.

Power control

*Only for chargers with Digital Inputs (WLACx-xxxxxxxxxDxxx)

The charger can be connected to up to two switches via the digital inputs of the charger to remotely control the charging current. By default, closing the DI1 switch stops charging, and closing the DI2 switch limits charging to 6A.

The default limit value and polarity can be adjusted in the commissioning interface.
This feature supports active power control by the distribution system operator (DSO).

4.2. Group features

A group consists of one Leader and multiple Followers that communicate with each other:

Via Ethernet cables in star configuration, with each charger connected to a network switch or router	Up to 32 chargers via RS485 network cables in a daisy-chain configuration.
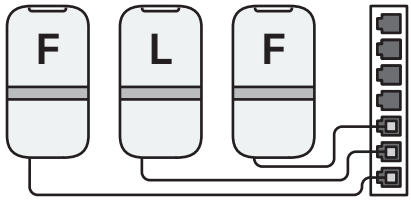	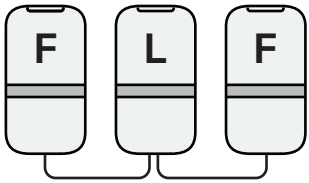
F = Follower, L = Leader	

Note: in daisy chain configuration, the Leader should be as close to the middle of the group as possible.

Static group load balancing

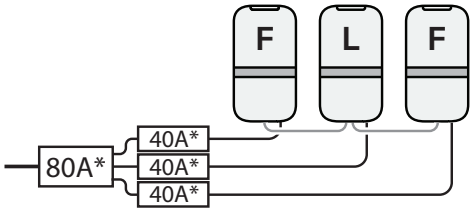

* example values

Group load balancing uses a set maximum limit to protect the group fuse limit (80A in the example above). The Leader continuously measures the current consumption of the group and adjusts the charging currents of individual chargers in real-time, based on the number of vehicles charging and their charging speeds. This prevents the total phase current draw from exceeding the limit of the group fuse. The limit for the group is set during commissioning of the Leader charger.

Dynamic (group) load balancing

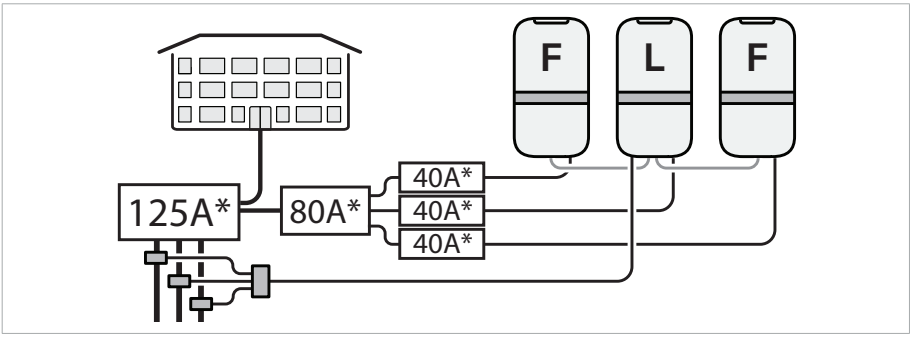

* example values

In addition to protecting the group fuse, dynamic group load balancing can also protect the main fuse that is shared with other appliances or buildings (125A in the example above).

Using a measurement source at the main entry point of the power grid, the Leader continuously monitors and adjusts the charging currents of individual chargers in real-time, based on the number of vehicles charging, their charging speeds, and power consumption by other appliances. Refer to Chapter 4.3 for more information on measurement sources.

Note: A miminum of 6A per charger is recommended. If the available current per EV drops below 6A, the next charger is placed in a queue until there is sufficient available current.

Group power control*

*Only for chargers with Digital Inputs (WLACx-xxxxxxxxxDxxx)

The digital inputs of the Leader charger can be connected to up to two switches to remotely control the charging current, allowing distribution system operators (DSOs) to manage grid load effectively.

By default, closing the DI1 switch stops charging, and closing the DI2 switch limits charging to 6A.

Change the default limit value and polarity during setup of the Leader in the commissioning interface.

Note: Apply Group power control to comply with nWG14a and VDE-AR-4100 installation norms.

4.3 Choose a measurement source

For certain features, the charger needs to be connected to a measurement source. Not all measurement sources support every feature. Select the appropriate measurement equipment for the desired features using the overview below.

	Feature			
Measurement Source	Dynamic Load balancing	Dynamic group load balancing	Solar charging	Household power slider
Energy meter Firmware DSMR 4/5 + Homewizard Wi-Fi P1 meter / P1 to RS485 converter	✓	✓	✓	✓
Energy meter Firmware DSMR 2 + Homewizard Wi-Fi P1 meter / P1 to RS485 converter	-	-	✓	✓
Homewizard Wi-Fi kWh meter MID	✓	✓	✓	✓
Modbus TCP meter	✓	✓	✓	✓
Modbus RTU meter	✓	✓*	✓	✓
CT Kit	✓	✓	-	-

* not available in combination with group load balancing via RS485 cables.

For CT coils or wired connection to a Modbus TCP meter, install a network cable (solid wire recommended) from the consumer unit to the installation location.

For Modbus RTU meter, run an RS485 Modbus cable from the fuse cabinet to the installation location.

Refer to **www.peblar.com** for a list of supported Modbus meters and CT types.

4.4. Network connection

The charger requires a stable internet connection for various functionalities, such as backoffice connection for managed chargers, firmware updates and time synchronization. No network connection results in limited functionality of the charger. There are three possible connection methods:

Ethernet connection to a router or network switch.

Connect the charger to a router or network switch with a network cable.

LTE (2G/4G) with SIM card.

Only for variants with built-in LTE modem (WLACx-xxxxxxxLxxxxx).

Refer to Appendix C for more information about the model identification string.

If LTE network connection is used, insert a SIM card.

Note: the SIM card may already be installed upon delivery.

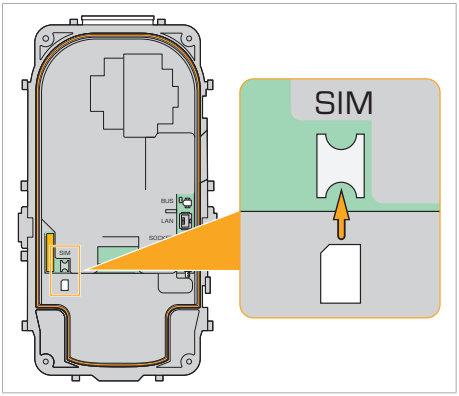

Wi-Fi connection to a router.

Before installing a charger with wireless connection, verify network stability and signal strength at the mounting location. Use a signal strength meter or smartphone app to measure WiFi signal strength.

Place the measurement device exactly where the charger will be mounted and record the signal reading. Test with typical environmental conditions, such as closing doors between the router and charger.

The signal must be stronger than -65 dBm to establish a reliable connection.

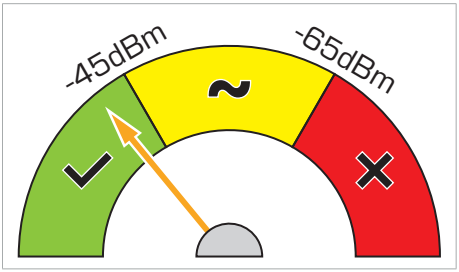

If signal strength is weak, consider these solutions:

- Use an ethernet cable connection
- Install a Wi-Fi repeater or access point

4.5. Necessary tools

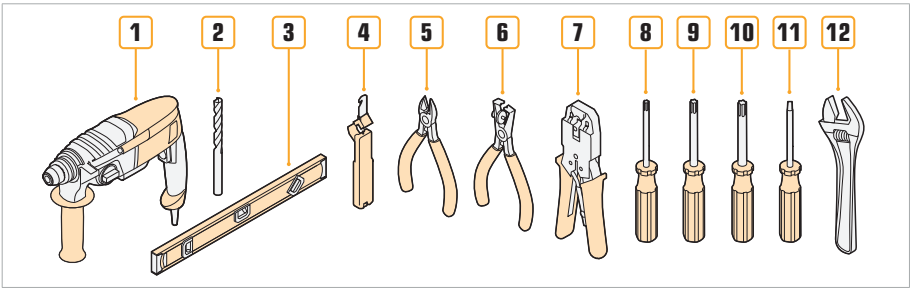

1 Power drill
2 8mm drill bit
3 Spirit level
4 Cable stripper
5 Cable cutter
6 Wire stripper
7 RJ45 connector crimping tool
8 T10 Torx screwdriver
9 T20 Torx screwdriver
10 T30 Torx screwdriver
11 2mm flathead screwdriver
12 Adjustable wrench

4.6. Choose a location

Before installing the charger, determine and prepare the best suited installation location. Follow these steps to ensure optimal placement and preparation:

Choose a location that allows the charging cable to reach the charging port of the EV without putting strain on the cable. Consider the following:

- Preferably install in a location protected from direct sunlight.
- Keep at least 300mm of free space around the charger.
- Install the mounting ring at a height of 1400mm.
- The vehicle connector of the fixed cable should hang 0.5-1.5m above ground when stored.

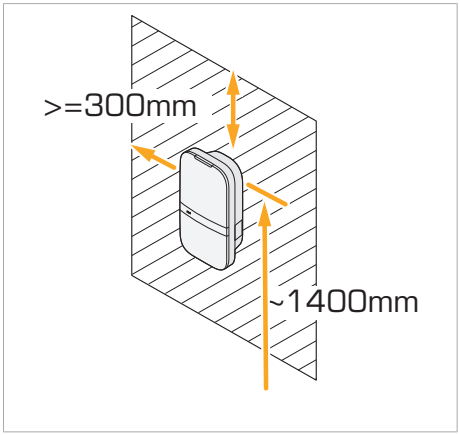

- The wall should be flat and able to bear the load.
- The wall should free from water/gas pipes and/or electrical wiring
- The location should comply to local accessibility regulations.

4.7. Run cables to the location

Power grid connection

First, determine the power grid type and the amount of phases.

Install a dedicated upstream circuit breaker (MCB) and residual current device (RCD) for each charger. The MCB (characteristic B or C) must have a current rating (max. 40A) in accordance with the local mains supply and required charge current. The RCD must be either type A (30 mA) or type B (30mA), depending on local regulations.

Run a power cable from the dedicated MCB in the consumer unit to the installation location. Refer to local installation requirements for cable specifications.

* Check local installation requirements

Network

If the charger requires a wired network connection, run a network cable (max. 100m) from a router or network switch to the installation location.

Measurement source

- For CT coils or wired connection to a Modbus TCP meter, run a network cable (solid wire recommended) from the consumer unit to the installation location.
- For Modbus RTU meter, run an RS485 Modbus cable from the consumer unit to the installation location.

Power control

Run a network cable from the external switches to the installation location of the charger. For group installations, run the cable to the Leader charger.

Interconnection for dynamic load sharing

- For daisy-chain, run RS485 cables between each consecutive installation location.
- For star configuration, run ethernet cables (min. CAT5) from each installation location to a router or network switch.

5. Installation

5.1. Mount the charger to the wall

Note For pole mounted installation (sold separately), refer to the installation manual of the pole.

1. Fix the drilling template to the wall with the top marking at ±1400mm above the ground.
2. For concrete or stone walls: Drill three Ø8mm holes through the markings.

Note: Make sure the template is level.

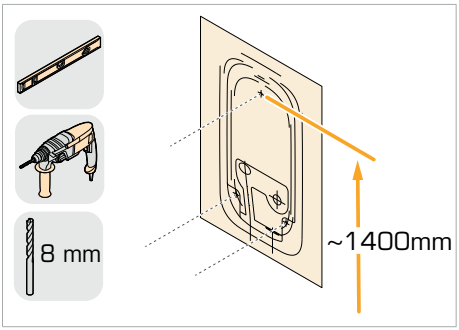

3. For concrete walls: Insert Ø8mm plugs in the holes.
4. Screw the mounting ring into the top hole with the included 5×60mm countersunk head screw.

Note: Place the flat side of the mounting ring against the wall.

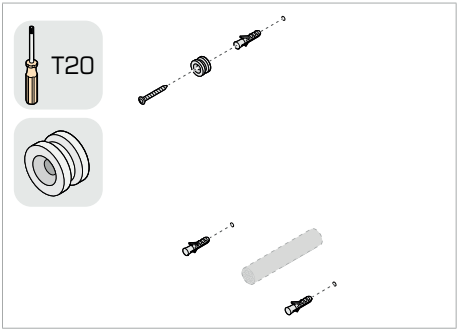

5. Open the front assembly.
6. Unplug the power connector from the front assembly.
7. Place the front assembly aside.

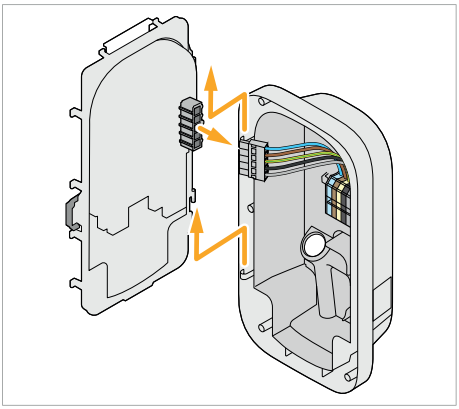

8. Insert the peripherals grommet in the rear left hole.

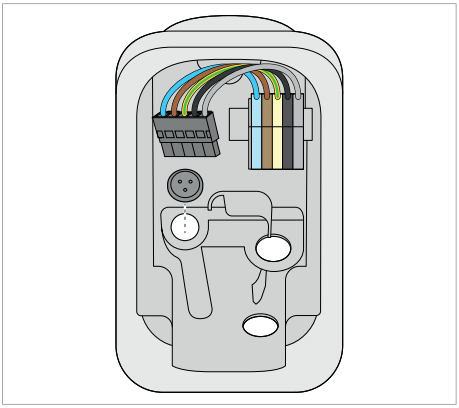

9. Select the preferred power cable entry:
   A: Rear power cable entry
   B: Bottom power cable entry

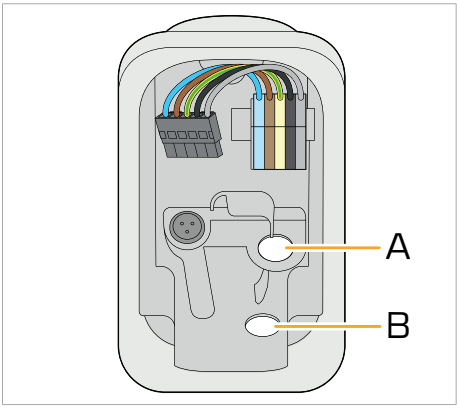

A Rear power cable entry	B Bottom power cable entry
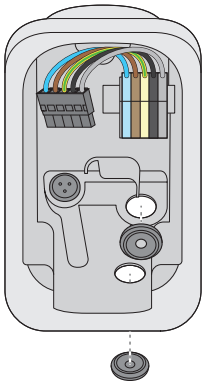	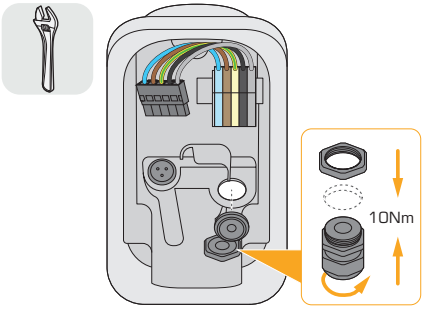
1. Insert a cable grommet into the bottom right hole. 2. Create a hole in the other cable grommet. 3. Insert the cable grommet in the top right hole.	1. Insert a cable grommet into the top right hole. 2. Insert the cable gland into the bottom right hole. **Note**: Use the reduction insert for Ø9 - 14mm power cables. 3. Secure the cable gland at 10 Nm.

NOTICE Ensure the grommets are properly inserted to guarantee resistance to ingress of water, dust, and insects.

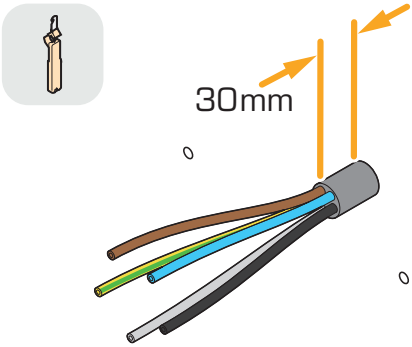	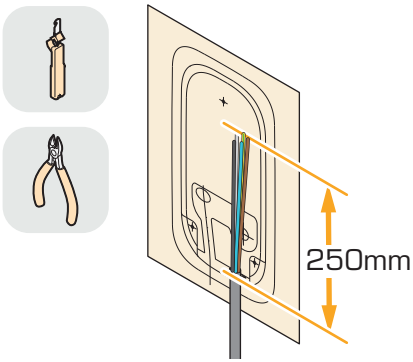
4. Strip the power cable insulation. Keep 30mm insulation at the wall to ensure a water tight fit of the cable grommet.	4. Strip 250mm of the power cable insulation.

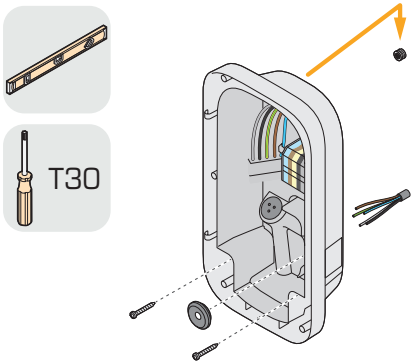	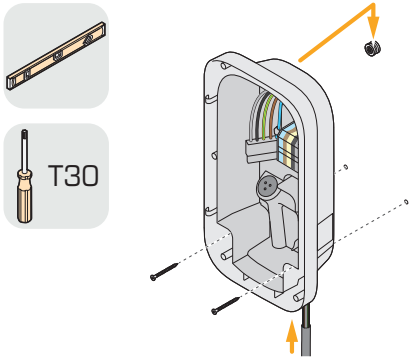
5. Push the power cable through the cable gland. 6. Insert the ethernet cable(s) through the peripherals grommet. 7. Hang the base over the mounting ring and press down firmly. 8. Secure the base to the wall with two included 5×50mm pan head screws.	5. Push the power cable through the grommet. 6. Insert the ethernet cable(s) through the peripherals grommet. 7. Hang the base over the mounting ring and press down firmly. 8. Secure the base to the wall with two included 5×50mm pan head screws.

5.2. Connect the power cable

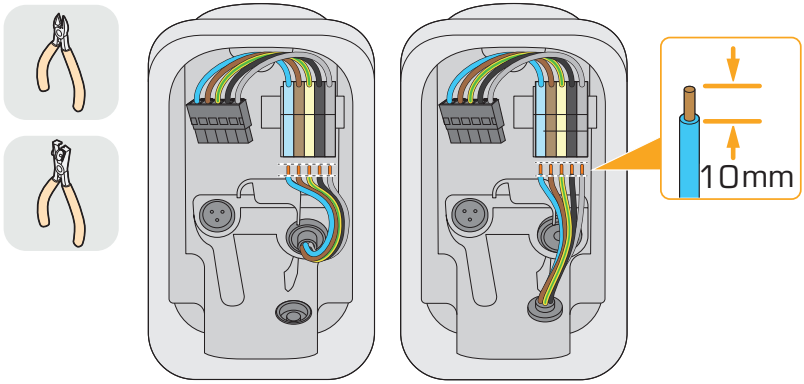

1. Cut the mains supply wires to size, make sure the wires are as short as possible to avoid interference with the front assembly.
2. Strip 10mm from the mains supply wires.
3. Guide the mains supply wires to the terminal block along the right side of the cable guard.

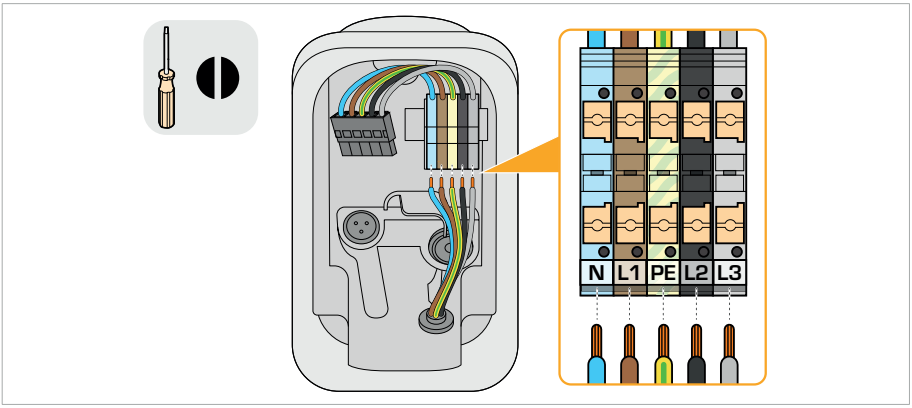

4. Insert the mains supply wires into the push-in connectors, according to the power grid.

5.2.1. Single charger

3-phase	1-phase	2-phase without neutral (Delta grid with IT earthing system)
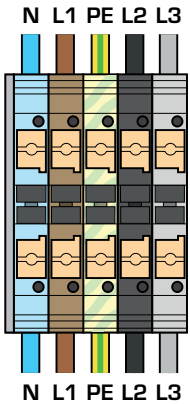	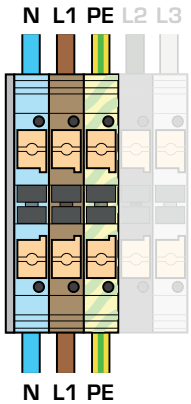	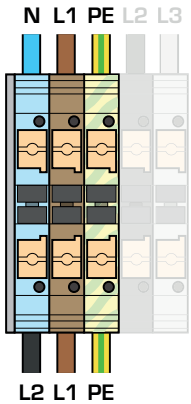

NOTICE Only install according to the IT earthing system diagram after checking the voltage of 230V between two phases. Connecting any other grid system according to this diagram will lead to permanent damage to the charger.

On IT earthing systems, switch off ground monitoring during commissioning.

5.2.2. Group chargers

When installing group chargers on one grid connection, apply phase rotation to distribute the load across all phases and prevent phase unbalance. To apply phase rotation, insert the phase wires of the power cable in alternating orders in the terminal block inside of the charger.

Charger 1	Charger 2	Charger 3	etc.
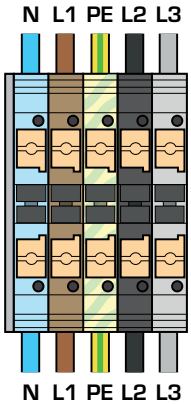	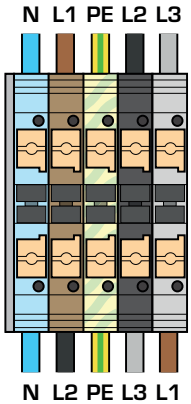	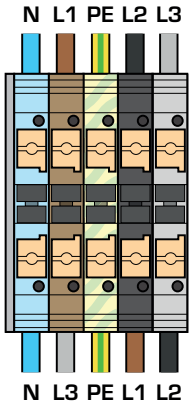	
RST (L1L2L3)	STR (L2L3L1)	TRS (L3L1L2)	

5.3. Connect the fixed charging cable - only for fixed cable variants

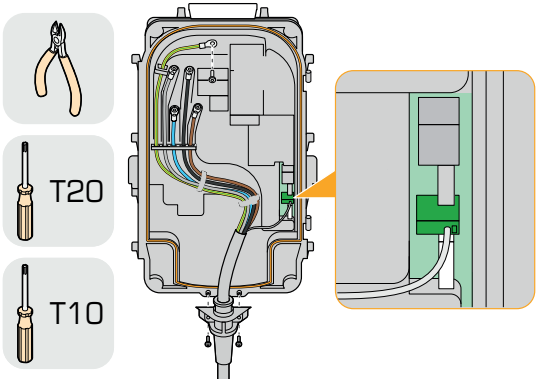

1. Attach the strain relief of the fixed charging cable to the front assembly.
   Use two 3×10mm strain relief screws. Tighten to 1.1 Nm.
2. Insert the white CP wire into the CP push-in connector on the front assembly circuit board.
3. Guide the power wires through the wire guards on the front assembly.
   The guards are labelled "PE – L3 – N – L2 – L1".

4. Connect the phase (L1, L2, L3), neutral (N), and earthing (PE) wires to the terminals. Use five M4×10mm screws. Tighten to 2 Nm.
5. Secure the power cable wires to the front assembly with two zip ties.

5.4. Place the front assembly

1. Place the front assembly on the hinges of the base.
2. Connect the power connector to the front assembly. Push until you hear it click into place.

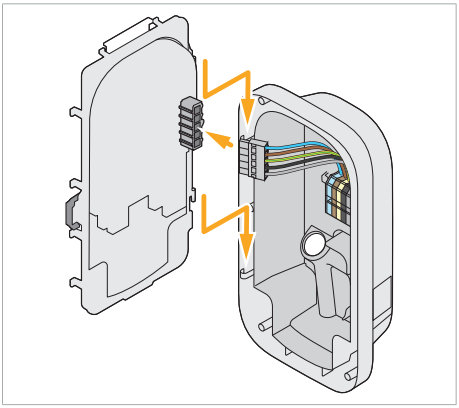

5.5. Set up a network connection

NOTICE Minimal required network cables are UTP (Cat 5), however we recommend S/FTP (Cat 6) cables to be used for stability.

5.5.1. Wired network connection

Connect the charger with a network cable to an internet enabled router when wired network connection applies.

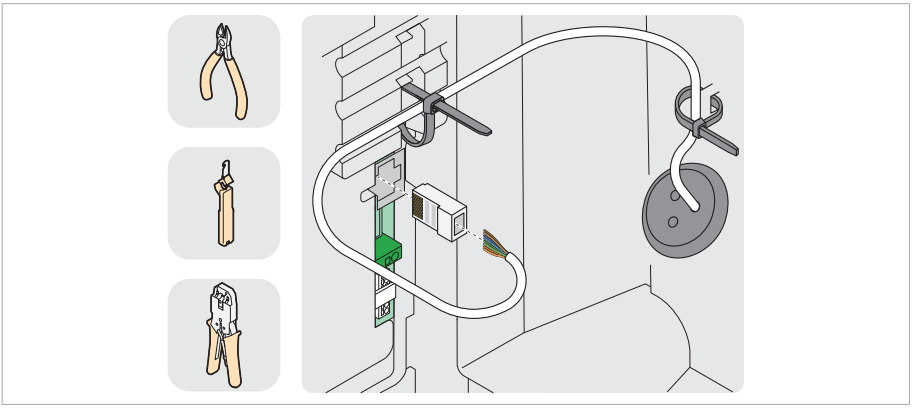

1. Create a hole in the peripherals grommet.
2. Push the network cable through the hole.
3. Attach an RJ-45 connector to the network cable using a crimping tool.

Note: Ensure the order of the wires matches on both sides of the cable.

4. Plug the network cable into the connector on the front assembly.
5. Secure the network cable to the front assembly and base with two zip ties.

5.5.2. Wi-Fi connection

If neither options are available, connect the charger to a wireless network via Wi-Fi during commissioning.

Note: a reception of at least -65dB is required for Wi-Fi connection.

5.6. Install the selected measurement source

5.6.1. CT-coils

In the consumer unit

1. Check the CT coil for an arrow indicating the intended orientation. The arrow must always follow the direction of the current for correct measurements.

Note: if there is no indication, the CT coil can be installed in either orientation.

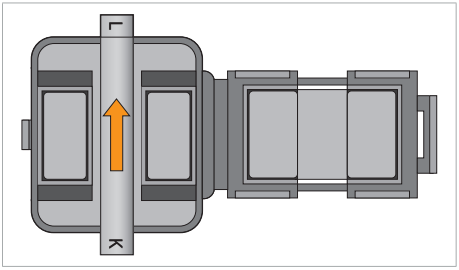

2. Mount one CT coil around each main phase wire of the household grid, directly after the main power switch in the consumer unit.

Note: CT2 and CT3 are only needed if there are three phases in the household grid.

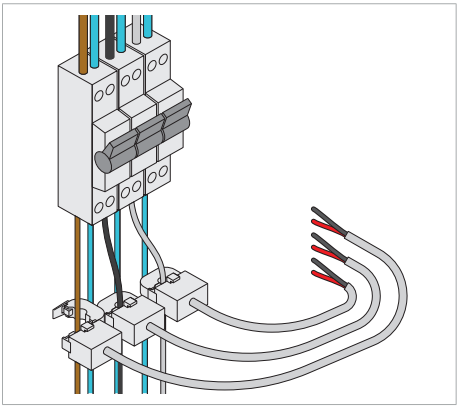

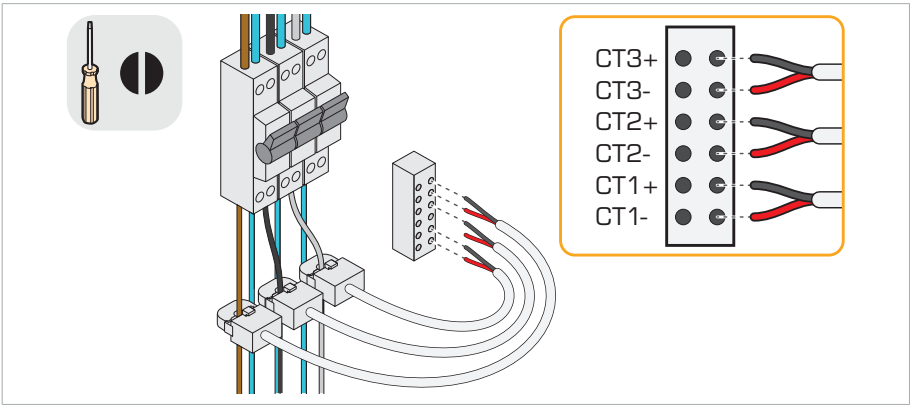

3. Insert the wires of the CT coils into the provided distribution block.

Note: the order of the wires is shown in the image above.

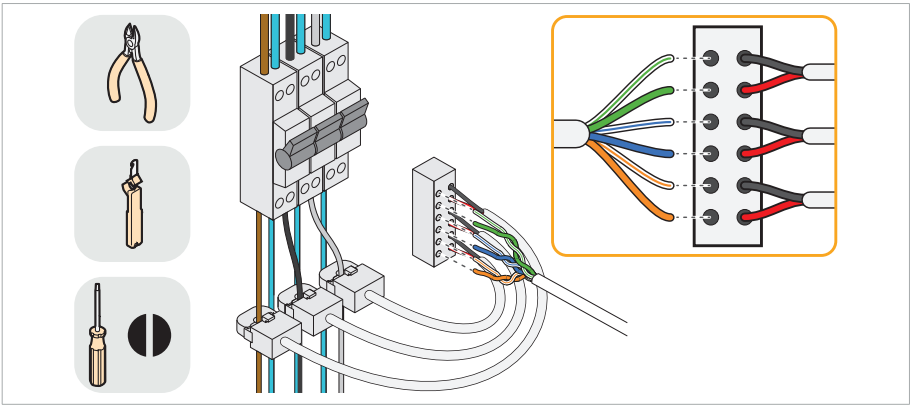

4. Cut the cable to size and strip ±20mm of insulation.
5. Insert six wires of the network cable into the pins in the distribution block.
6. Write down the polarity and phase for each wire.
7. Secure the distribution block in a suitable place.

In the charger

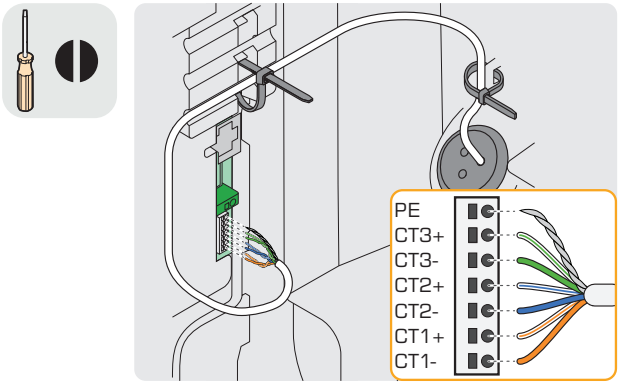

1. Make a hole in the peripherals grommet and push the network cable through.
2. Cut the cable to size and strip ±20mm of insulation.
3. Push the wires in the correct order into the connector labelled CT on the front assembly.

Note: The pin definition is shown in the image above.

Fix the cable to the front assembly and base with two zip-ties.

5.6.2. Modbus TCP meter

Note: If the TCP meter brand, model and IP address are not entered correctly, dynamic load balancing will not work.

1. Install and commission the Modbus TCP meter following its installation manual.
2. Connect the Modbus TCP meter to your local network via Ethernet cable or Wi-Fi.
3. Connect the charger to the same network via Ethernet (Chapter 4.5.1.) or Wi-Fi (Chapter 4.5.2.).
4. During commissioning, select the brand and model of the TCP meter as measurement source and enter the IP address of the TCP meter. Refer to the manual of the TCP meter for instructions on how to find the IP address.

Alternatively,

1. Install and commission the Modbus TCP meter following its installation manual.
2. Connect the Modbus TCP meter directly to the ethernet port of the charger.
3. Configure a static IP for the TCP meter. Refer to the manual of the TCP meter for instructions on how to set a static IP address
4. In the **Ethernet** settings during commissioning, set the **IP mode** to Manual and enter an IP address in the same range as the TCP meter (e.g. charger is 192.168.1.1 and TCP meter is 192.168.1.2).
5. Leave the **Default Gateway** empty.

6. During commissioning, select the brand and model of the TCP meter as measurement source and enter the IP address of the TCP meter. Refer to the manual of the TCP meter for instructions on how to find the IP address.

5.6.3. Modbus RTU meter

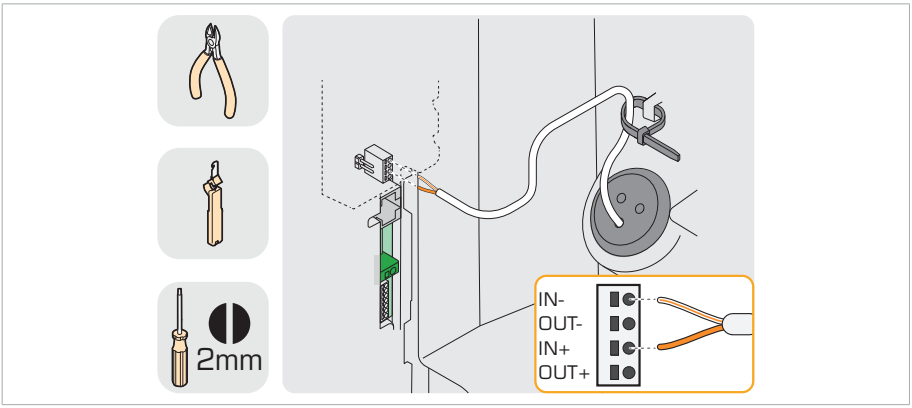

1. Install and commission the Modbus RTU meter following its installation manual.
2. Connect the Modbus RTU meter to an RS485 cable.
3. Make a hole in the peripherals grommet and push the network cable through.
4. Cut the cable to size and strip ±20mm of insulation.
5. Push the wires into the **IN+** and **IN-** terminals of the connector labelled **BUS** on the front assembly.
6. Fix the cable to the front assembly and base with two zip-ties.
7. During commissioning, select the brand and model of the RTU meter as measurement source and set the communication parameters (Baud rate, slave address, parity, stop bits) to match the parameters of the RTU meter.

5.6.4. HomeWizard instructions

1. Install and commission the HomeWizard following its installation manual.

Note: Make sure the API of the HomeWizard is enabled.

2. Connect the charger to the same network via Ethernet (Chapter 5.5.1.) or Wi-Fi (Chapter 5.5.2.).
3. During commissioning, select the HomeWizard as measurement source.

Note: This connection method is only available if you have a smart power meter with a P1 port.

5.7. Interconnect chargers for daisy-chain group load balancing

5.7.1. Cable for outgoing data*

*not applicable for the last charger in the daisy-chain.

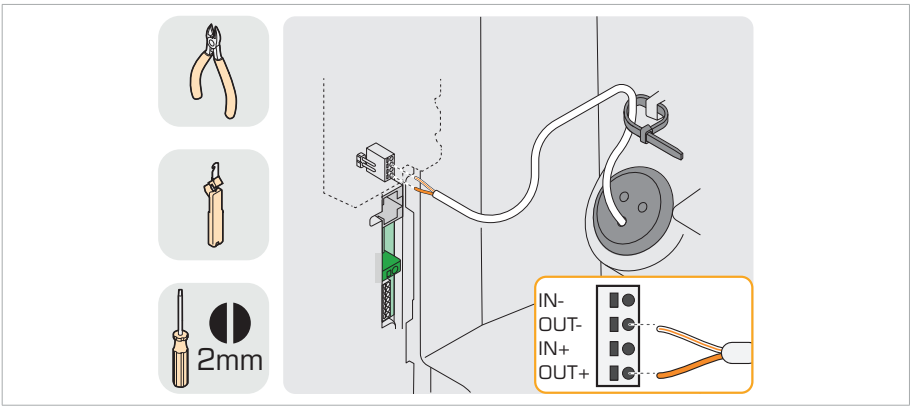

1. Make a hole in the peripherals grommet and push the network cable through.
2. Cut the cable to size and strip ±20mm of insulation.
3. Push two wires into the BUS connector labelled **OUT+** and **OUT-**.
4. Remove the other wires.
5. Write down the colours of the inserted wires for each connector.
6. Run the cable to the next charger in the daisy-chain.

5.7.2. Cable for incoming data*

*not applicable for the first charger in the daisy-chain.

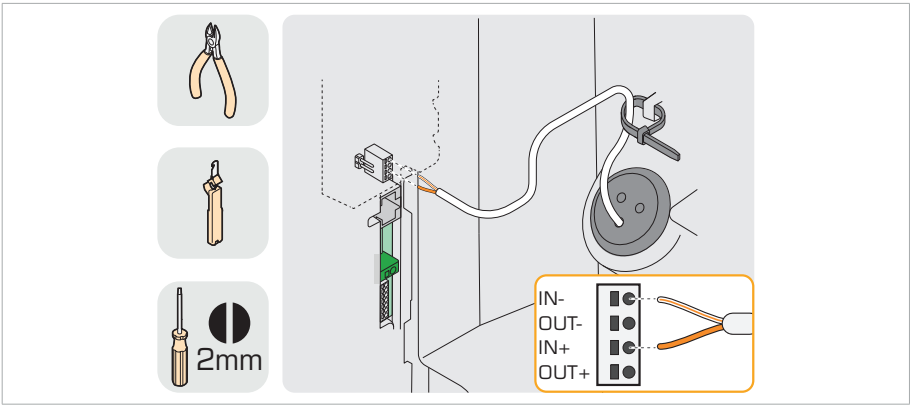

1. Push the network cable from the previous charger through the peripherals grommet.
2. Cut the cable to size and strip ±20mm of insulation.
3. Insert the same two coloured wires into the BUS connector labelled **IN+** and **IN-**, matching the previous charger.
4. Remove the other wires.

5.7.3. Continue the daisy-chain

Repeat Chapters 5.7.1. and 5.7.2. for all chargers in the daisy-chain.

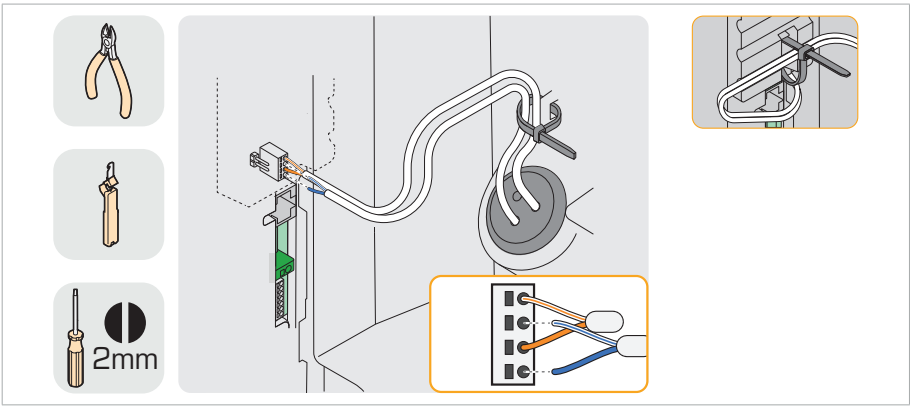

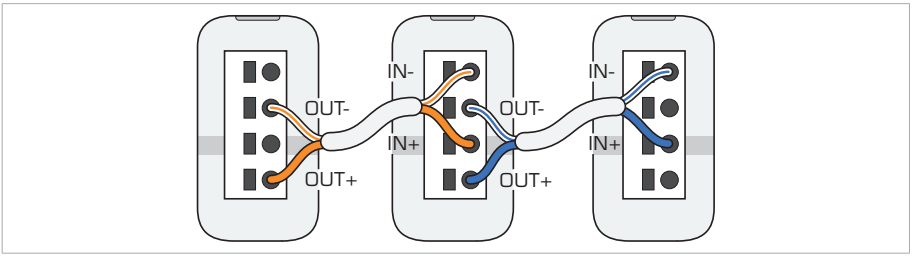

5.7.4. BUS jumper

Insert the provided BUS terminal jumpers in the first and last chargers of the daisy chain for termination.

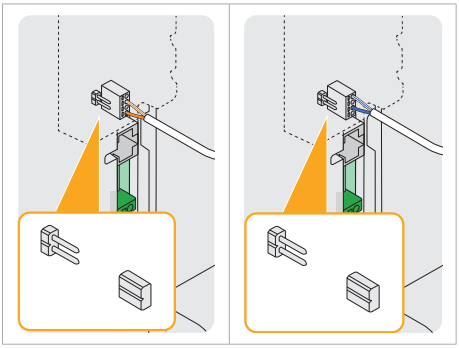

5.7.5. Active power control

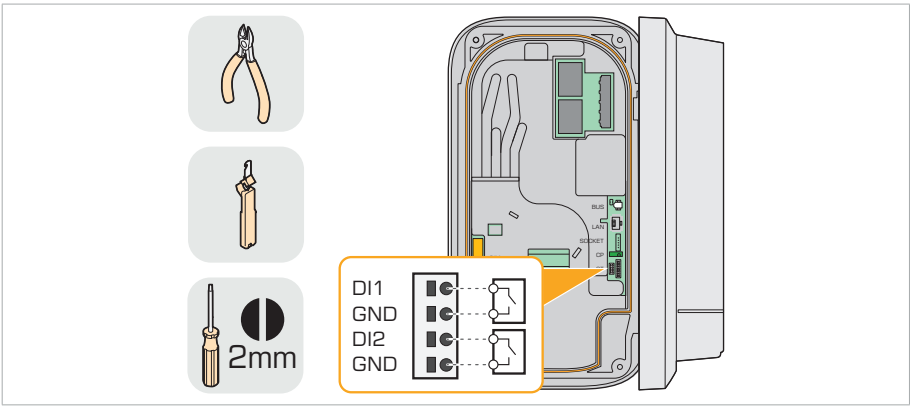

Note: only for chargers with Digital Inputs (WLACx-xxxxxxxxxDxxx):

Connect the digital inputs DI1, DI2, of the Leader charger to up to two switches to remotely control the charging current, allowing distribution system operators (DSOs) to manage grid load effectively.

5.8. Close the charger

1. Plug the power connector into the front assembly.
2. Perform a PE continuity check.
3. Make sure no water, dirt or foreign objects are in the charger.

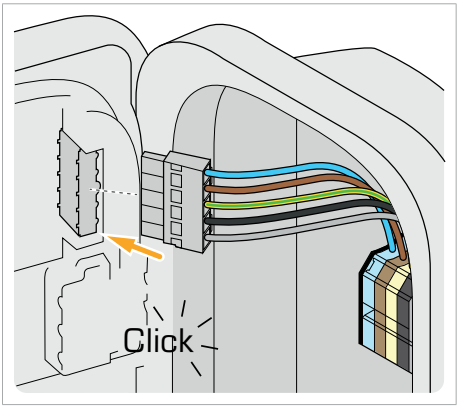

4. Close the front assembly.
   Note: Make sure no cables are trapped between the base and the front assembly.
5. Secure the front assembly with six provided M4×10mm screws at 2Nm in the order indicated in the image above.

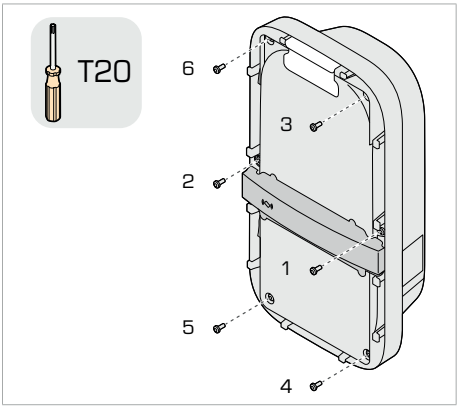

5.9. Switch on the power supply

WARNING!

Make sure the front assembly is closed and secured to avoid the risk of an electric shock.

1. Switch on the mains circuit breaker in the consumer unit.
   The LED lights up yellow while booting up.
2. Continue to Chapter 6.: Commissioning.
   Note: If the indicator turns red, the charger has detected an error. Refer to Chapter 6. for troubleshooting.

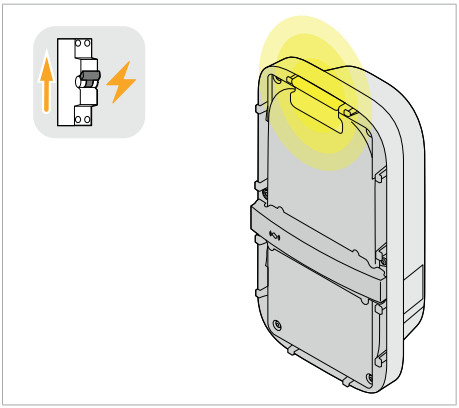

6. Commissioning

When the charger is booted up and the LED is yellow, you can commission the charger. First off, connect with the charger.

6.1. Connect to the WLAN hotspot of the charger

The WLAN hotspot is used for direct access to the web interface of the charger (e.g. for commissioning). By default the hotspot is active for 15 minutes after power on.
The wireless network information of the charger is printed on the sticker in the Quick Start Guide of the charger.

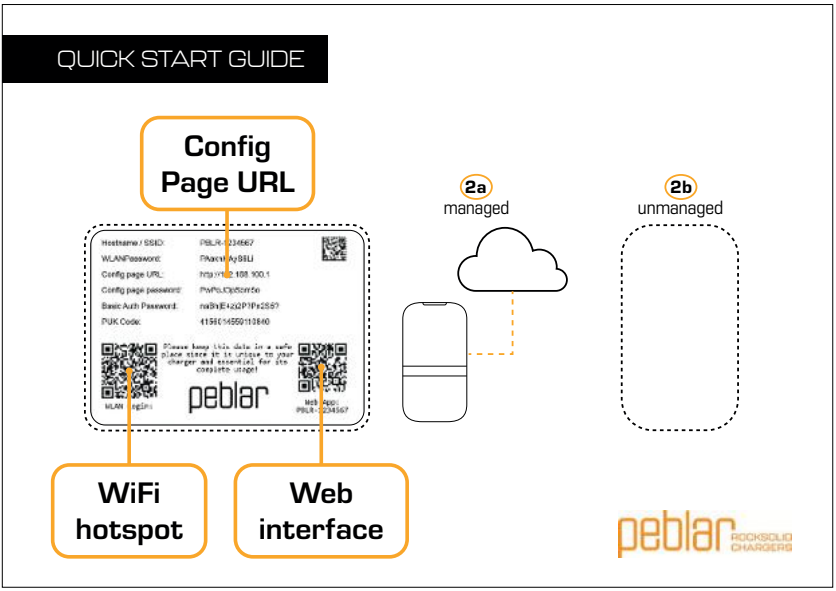

Enable Wi-Fi on your device, select the **Hotspot** name from the list of available networks and enter the **WLAN password**.

Note: On mobile devices, you can also scan the **WLAN login** QR code to instantly connect.

Note To re-activate the hotspot for 15 minutes, switch the power supply off and back on again.

6.2. Complete the online installation wizard

When connected, access the commissioning interface by browsing to the **Config page URL**: 172.16.0.1 or the local address: PBLR-XXXXXXX.local

Note: On mobile devices, you can also scan the **Web App** QR code on the sticker in the Quick Start Guide.

Check the box to confirm you are qualified and press **Get started.**

6.2.1. WLAN

1. Enable **Wi-Fi,** select the Wi-Fi network from the list of **Available networks**
2. Enter the Wi-Fi password to connect the charger to the network.

If the connection is successful, the **Network status** shows **Connected.**

6.2.2. Firmware

1. **Check for updates** to ensure the charger has the latest firmware installed.
   Note: after installing new firmware, the charger reboots and you lose connection to the commissioning interface. After rebooting, reconnect to the Wi-Fi hotspot and re-access the commissioning interface by scanning the **Web App** QR code.

6.2.3. General installation

1. Select your **Time zone**.
2. Select the **Installation current limit** per phase of your power grid.
3. For IT grid systems: disable **Ground monitoring**.
4. Select the amount of **Connected phases** to the charger.
5. For installation in Germany or Austria: enable **Phase imbalance monitoring**.

6.2.4. Group load balancing

1. For a single charger: Set **Enable group load balancing** to **No** and press **Next**.
   For multiple chargers: Set **Enable group load balancing** to **Yes**.
2. Select the **Phase rotation** configuration applied to the charger. Refer to section 3.7.1. for more information.
3. Enter the **Group load balancing fallback current** in case of disconnection from the Leader.
4. Define if the charger is the **Leader** or a **Follower** in the group of chargers.
   Note: Only one Leader can be present in a group of chargers.
5. Select the installed **Group load balancing interface**.
6. Enter the **Group ID** and **Group password**.
7. For the group Leader: Select the **Group maximum current** between 6-8192 A.

6.2.5. Dynamic (group) load balancing

Note: Dynamic group load balancing is only applied in the group leader, not in the followers. For individual chargers, you will set dynamic load balancing.

1. For a single charger: Set **Enable dynamic load balancing** to **No** and press **Next**.
   For multiple chargers interconnected with network cables: Set **Enable dynamic group load balancing** to **Yes**.
2. Enter the **Facility/house maximum current** of the power grid.
3. Enter the **Dynamic (group) load balancing fallback current** in case of disconnection from the Leader.
4. Select the installed **Measurement source**.
5. Follow the commissioning steps for your selected source:

Current Transformer

1. Select the provided model of current transformers.

HomeWizard

1. Select the **HomeWizard** from the list of available devices.
   Note: The charger has to be connected to the same Wi-Fi network as the HomeWizard. Press the refresh icon no device is found.

Modbus TCP

1. Enter the **IP address** and **Port** of the connected power meter.
2. Select the **Meter Brand**, **Device type** and press **Verify Modbus device** to search for the power meter.

Refer to Chapter 5.6.2. for more information.

Modbus RTU

1. Select the **Meter Brand** and **Device type**.
2. Set the communication parameters (Baud rate, slave address, parity, stop bits) to match the parameters of the RTU meter.

6.2.6. Authorization

3. Select if you want authorization to be **managed** by a charge point operator, or have the charger function standalone with **unmanaged** authorization.

For managed:

4. Select the desired **Backoffice**.
5. If applicable: enter the customer-specific key following the **Backoffice URL** for authorization management.

For unmanaged:

6. Select if authorization is required for starting a charge session.
7. If authorization is required, press **+** to register a new RFID token to the charger.
8. Scan the provided RFID token, attached to the Quick start guide, across the RFID reader on the charger.

A beep sounds when the token is detected.

9. Enter a name for the RFID token and press **Add**.
   Note: You can add more tokens after commissioning and enable or disable the unmanaged authorization via the user web interface.
10. Press **Next.**

6.2.7. Finish

11. Press **Finish & Reboot**.

The charger reboots and you lose connection to the commissioning interface. After rebooting, the status LED turns green when the charger is booted up and ready for use.

Note: If the LED lights up yellow and the charge point is configured for managed authorization, contact the charge point operator to accept the charge point in their system.

Note: If the Status LED blinks red, refer to chapter 6. to solve the issue.

Some things to note during commissioning:

- For IT grid systems, disable **Ground monitoring**.
- For installation in Germany or Austria: enable **Digital inputs** if required by the DSO.
- For **backoffice connection**, make sure to match the APN settings with the SIM card in the charger, and set the charger to **Managed** in the **Authorization** screen.
- For **Modbus RTU** as measurement source, select the brand and model of the RTU meter and set the communication parameters (Baud rate, slave address, parity, stop bits) to match the parameters of the RTU meter.
- For **Modbus TCP** as measurement source, select the brand and model of the TCP meter and enter the IP address of the TCP meter.

6.3. Attach the front covers

Now that the charger is commissioned, align the front covers to the display and push to click the front covers on the front assembly.

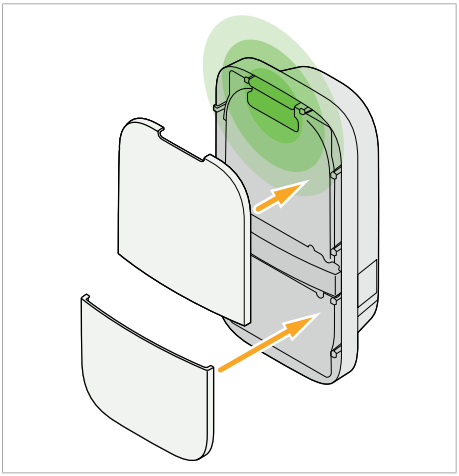

7. Troubleshooting

When an error is detected, the status LED indicates this with a sequence of flashing red lights. This chapter explains how the user can troubleshoot these errors.

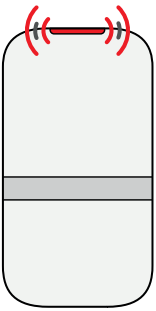

1×	**Incorrect installation or ground fault**
	Contact support/service if the issue persists.
2×	**Internal fault**
	1. Perform a reboot using the web interface. 2. Perform a power-cycle to reboot the charger. Contact support/service if the issue persists.
3×	**EV connection fault**
	1. Unplug the charging cable from the vehicle. 2. For socket models, unplug the charging cable from the charger. 3. Inspect the charging cable and plug for dirt or damage. 4. If the charging cable or plug is damaged, contact customer support. 5. If no dirt or damage is found, try to start a charging session again. Contact support/service if the issue persists.

8. Decommissioning

WARNING!

- Decommission the charger should only be done by qualified installers.
- Switch off the power supply and apply proper lock out tag out before opening the front assembly to avoid the risk of an electric shock.

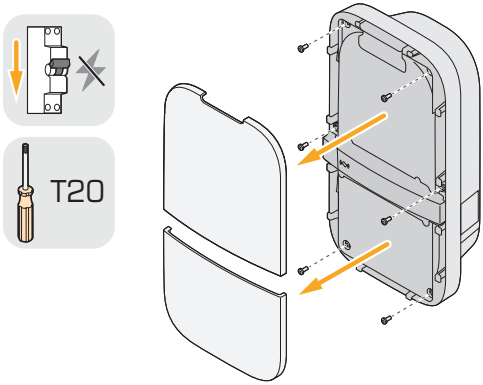

1. Switch off the mains supply to the charger.
2. The covers are held in place with snap fits. Place your fingers behind the front covers and carefully remove the front covers.

NOTICE Do not use any sharp or metal objects to avoid damaging the front covers.

3. Remove the six M4×10mm screws from the front assembly.

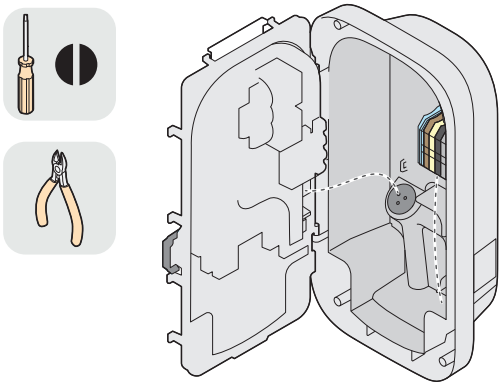

4. Open the front assembly.

5. Unplug the mains supply connector from the front assembly.
6. Unplug any peripheral cables and wires from the front assembly and cut all necessary cable ties.
   Note: Use a max. 2mm flathead screwdriver to release the network cable wires from the terminals.
7. Press the push-in connectors on the terminal block with a flathead screwdriver to remove the mains supply wires.

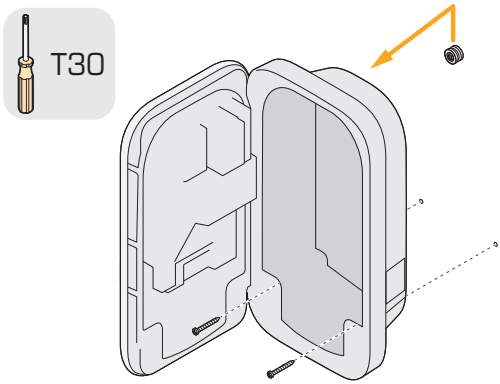

8. Remove the bottom two wall screws from the base.
9. Lift the charger upwards to release it from the mounting ring and pull it from the wall.
10. Remove the top wall screw and mounting ring.
11. Keep the mounting ring with the charger for remounting in the future.

9. Discard

Do not dispose this charger in household waste. Instead, dispose this charger at a local collection point for electric/electronic devices to enable recycling and thus avoiding negative and hazardous impacts on the environment. Ask your municipality or local authorities for respective addresses.

Recycling of materials saves raw materials and energy and makes a major contribution to conserving the environment.

APPENDIX A: **DECLARATION OF CONFORMITY**

Hereby, Prodrive Technologies N.E. B.V. declares that the radio equipment type AC charger is in compliance with Directive 2014/53/EU. The full text of the EU declaration of conformity is available at the following internet address: **peblar.com/downloads**

APPENDIX B: **DISCLAIMER OF LIABILITY**

The manufacturer cannot be held responsible for personal injury, damage to the charger or property damage caused by incorrect use, foreseeable misuse or failure to follow the instructions in this manual. This also applies to unauthorised modifications of the charger and the use of non-approved spare parts, tools or accessories.

Prodrive Technologies N.E. hereby excludes all liabilities, warranties, terms and conditions, whether oral or written, express or implied by law, customer or otherwise, including, but not limited to, any warranties, terms and conditions, of fitness for purpose, description, and quality to the maximum extent permitted under applicable law. Prodrive Technologies N.E. have compiled the contents of this document to the best of their knowledge. No express or implied warranty is given for the completeness, accuracy, reliability, or fitness for particular purpose of its content. Specifications and performance data contain average values within existing specification tolerances and are subject to change without prior notice.

APPENDIX C: MODEL IDENTIFICATION STRING

Each charger has a model identification string, located on the label on the side of the charger. Use the model identification string to identify the configuration of your charger. An explanation of the model identification string is shown below.

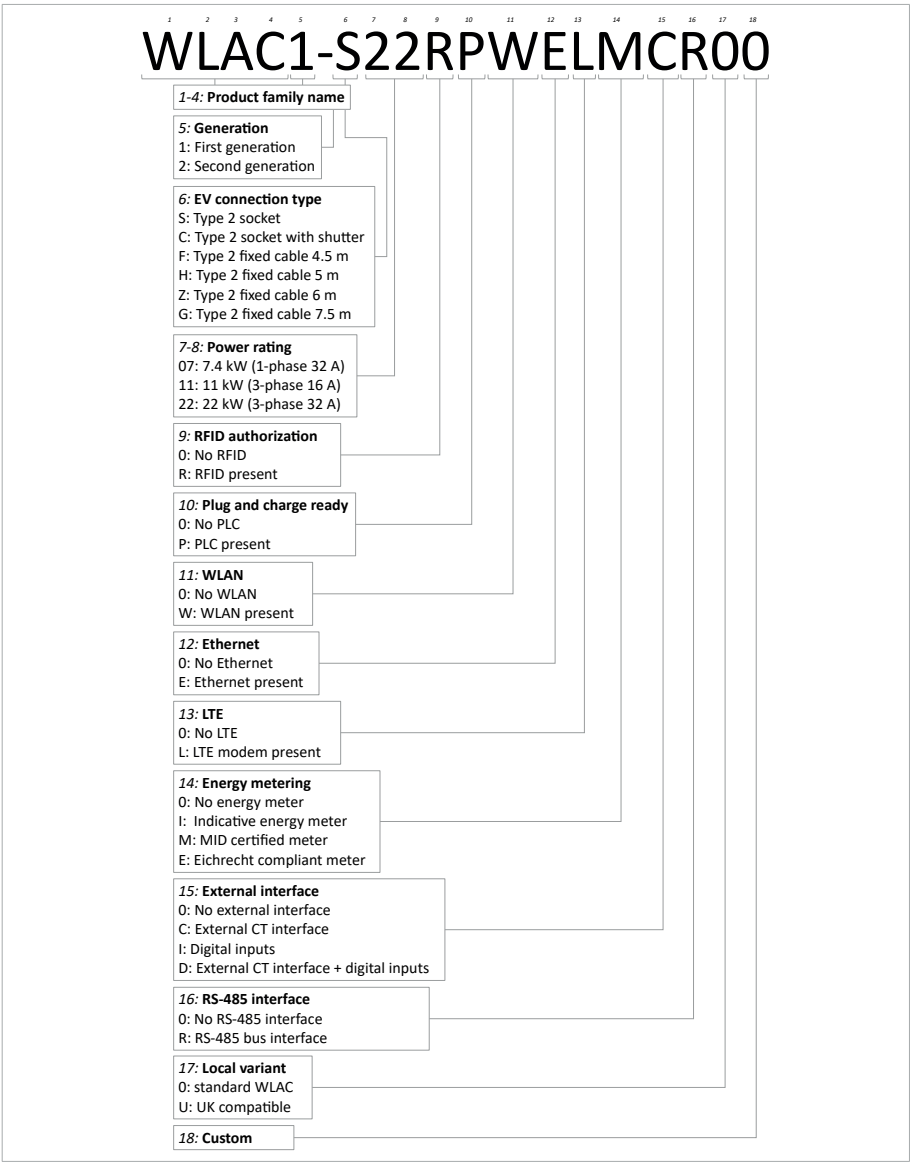

EN - original manual | version 1.0 | 10/2025

2025 Prodrive Technologies N.E. All rights reserved

Manufactured by Prodrive Technologies N.E. B.V.
Science Park Eindhoven 5501, 5692 EM Son, The Netherlands
www.peblar.com